PRODUCT SPECIFICATION

Customer:

Customer's part number:

Product description: GSM Terminal Antenna

Uni Link's part number: YNX-3G-2dB-007

Issue Date: 20160517

Note: 800-2170MHZ,SMA 公头, ROHS

客户签名				深圳市雅诺讯科技有限公司		
核准	审核	检查		核准	审核	检查
				黄杰武	詹秋文	方珊梅

Shenzhen Yetnorson Technology Co.,ltd.

1、PRODUCT TECHNICAL SPECIFICATION

Electrical Specifications	
Frequency Range (MHz)	824-960/1710-2170 MHz
Input Impendence (Ω)	50
V.S.W.R	≤3
Gain (dBi)	<3
Polarization Type	Vertical
Power Capacity (w)	50
Antenna Length (mm)	Ø8X53mm
Connect Type	SMA
Radome Color	Black
Weight (g)	6

2、PRODUCT PICTURE

3、PRODUCT SPECIFICATION CHART

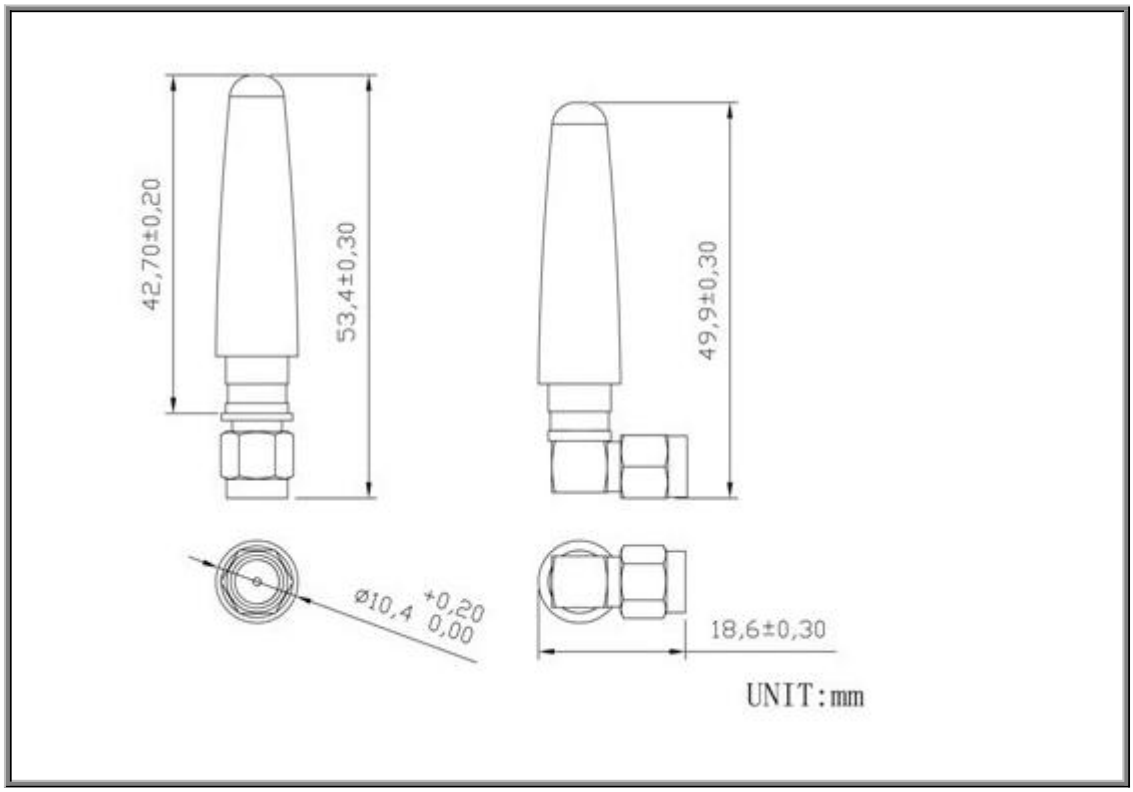
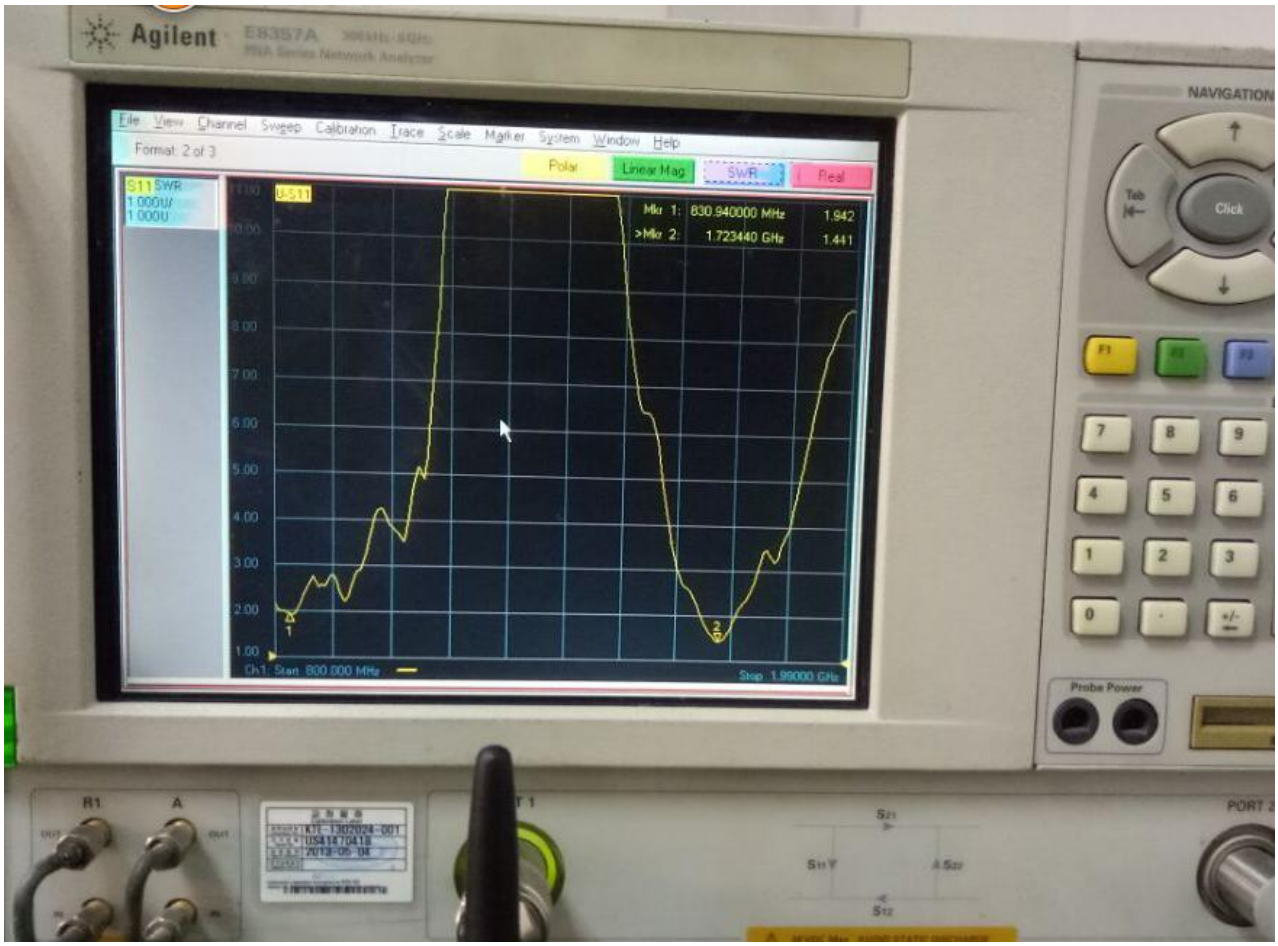
4、STATIONARY WAVE PATTERN