PHILIPS

Xitanium

LED Driver

Datasheet

Xitanium 150W 1.05A 230V Y

LED-based light sources are an excellent solution for outdoor environment. They are long-lasting and require low maintenance. However, to get the best out of the LEDs, these light sources require highly reliable and efficient LED Drivers. The new Philips Xitanium Fixed Output and Dimmable (1-10V) LED Outdoor Drivers are specifically designed to deliver reliable performance and protection while meeting the strict performance, approbation and application requirements.

Benefits

Reliability

- Robust design; capable of withstanding harsh outdoor conditions.
- Long lifetime and high survival rate.
- Superior thermal management suitable for outdoor application.
- Backed by 5 year warranty from a company you can trust.

Affordable

- Component integration in advanced IC enables cost effective design.
- Proven robustness & reliability secure the lowest luminaire maintenance over time.

Easy to use

- Extreme compact size. fitting with varied luminaires.
- Easy to design-in based on the good thermal management and extra EMI margin

Features

- Proven robustness and reliable electronic driver design.
- Achieving highest efficiencies based on advance technology.
- Long lifetime; 50k hrs @Tc max.
- Extreme compact size, fitting with varied and critical luminaires.
- Suitable for Class I isolated luminaires.
- Authorized certificate: ENEC, CB, CE and CCC.

Applications

- Road and street lighting
- Area and flood lighting
- Tunnel lighting
- High-bay

Electrical Input Data

Specification item	Value	Unit	Condition
Nominal Input Voltage	220…240	Vac	
Input Voltage AC	202…254	Vac	Performance range
Operation Voltage AC	110…305	Vac	Safety operation
Nominal Input Frequency	50…60	Hz	
Input Frequency AC	47…63	Hz	Maximum permissible range
Nominal Input Current	0.77…0.71	A	220V…240V at full load
Maximum Input Current	0.83	A	At 202V
Nominal Input Power	168	W	At 230V at full load
Power Factor	≥0.95		At 230V at full load
Total Harmonic Distortion	≤10	%	At 230V at full load
Efficiency	92	%	At 230V at full load

Electrical Output Data

Specification item	Value	Unit	Condition
Regulation Method	Constant Current		
Output Voltage	62…142	Vdc	
Output Voltage Max	220	Vdc	Peak voltage at open circuit
Output Current	700	mA	Performance range
Output Current Tolerance	±5	%	At max. output current, Ta=25°C (cold start)
Output Current Ripple LF	5	%	Ripple = peak / average, at<1kHz
Output Power	150	W	At full load
Galvanic Isolation	Yes		Basic; 2U+1000V

Electrical Data Control Input

Specification item	Value	Unit	Condition
Control Method	N/A	V	
Digital Interface	N/A		According 2.0 specifications
Mains Control	N/A		Can be configured via MultiOne
Time-based Integrated Control	N/A		Can be configured via MultiOne
Dimming Range	N/A	%	

Wiring & Connections

Specification item	Value	Unit	Condition
Input Wire Size	0.75	mm²	2-wire AWG18 ; 600V/105C rating or higher
Output Wire Size	0.75	mm²	2-wire AWG18; 600V/105C rating or higher
Input & Output Wire Length	270 ±30	mm	Out of enclosure
Control Wire Size	N/A	mm	N/A
Control Wire Length	N/A	mm	

CE Isolation

Basic Isolation: 2U+1000 V	Input Wires	Output Wires	Chassis
Input Wires	N/A	Basic	Basic
Output Wires	Basic	N/A	Basic
Chassis	Basic	Basic	N/A

Operational Temperature and Humidity

Specification item	Value	Unit	Condition
Ambient Temperature	-40...+55	°C	
Tcase Maximum	80	°C	Measured at Tc-point
Tcase Life	70	°C	Measured at Tc-point
Tcase Cut-Off	85	°C	Power to LEDs is reduced

Storage Temperature and Humidity

Specification item	Value	Unit	Condition
Ambient Temperature	-40...+55	°C	

Lifetime

Specification item	Value	Unit	Condition
Lifetime	100,000	Hours	At Tcase Life; Survival rate = 90%

Programmable Features

Specification item	Value	Remark	Condition
Adjustable Output Current (AOC)	N/A		See Design-In Guide
LED Module Temperature Derating (MTP)	N/A		
Constant Lumen Output (CLO)	N/A		
DC Emergency Dimming (DCEmDIM)	N/A		
Corridor Mode	N/A		
Energy Metering	N/A		
Diagnostics	N/A		

Features

Specification item	Value	Remark	Condition
Over Temperature Protection	Yes	Dim Down	Automatic Recovery
Open Circuit Protection	Yes		Automatic Recovery
Short Circuit Protection	Yes		Automatic Recovery
Over Power Protection	Yes		
Hot Wiring	N/A		
Suitable for fixtures with Protection Class	Class I		
Input Over-voltage	Yes		320Vac@48hrs 350Vac@2hrs

Certificates and Standards

Specification item	Value
Approval Marks	CE / CCC / ENEC / CB
Ingress Protection Rating	NA

Inrush Current

Specification item	Value	Unit	Condition
Inrush Current Ipeak	46	A	At 230Vac
Inrush Current Twidth	440	µs	At 230Vac, measured at 50% Ipeak
Drivers per MCB 16A Type B	≤11	pcs	

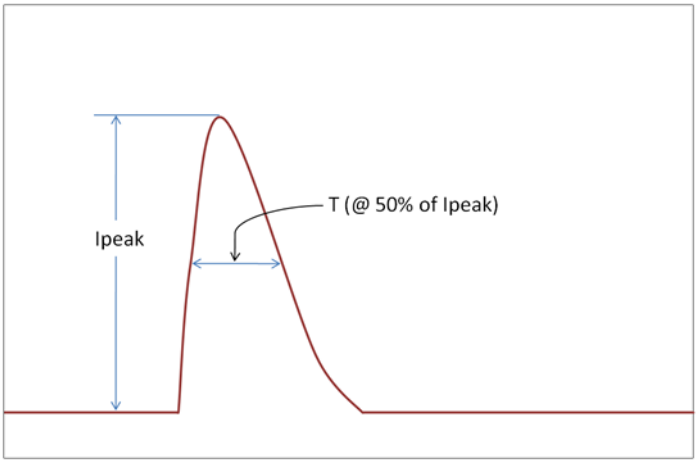

Earth Leakage Current

Specification item	Value	Unit	Condition
Typical Leakage Current	≤0.7	mApk	Meets IEC60598; LED module not included

Surge Capability

Specification item	Value	Unit	Condition
Mains Surge Capability Differential Mode	4	KV	L-N,2 Ohm
Mains Surge Capability Common Mode	4	KV	L/N-GND,2 Ohm
Control Surge Capability Differential Mode	N/A	KV	
Control Surge Capability Common Mode	N/A	KV	

Dimensions

Specification item	Value	Unit	Condition
Length overall	168	mm	
Width overall	59	mm	
Height overall	38	mm	
Mounting Holes Distance	153	mm	
Mounting Holes Width	43	mm	
Mounting Holes Size	5	mm	For M4 with max head diameter of 10mm
Weight	586	g	

Dimensions (in mm unless, otherwise specified)

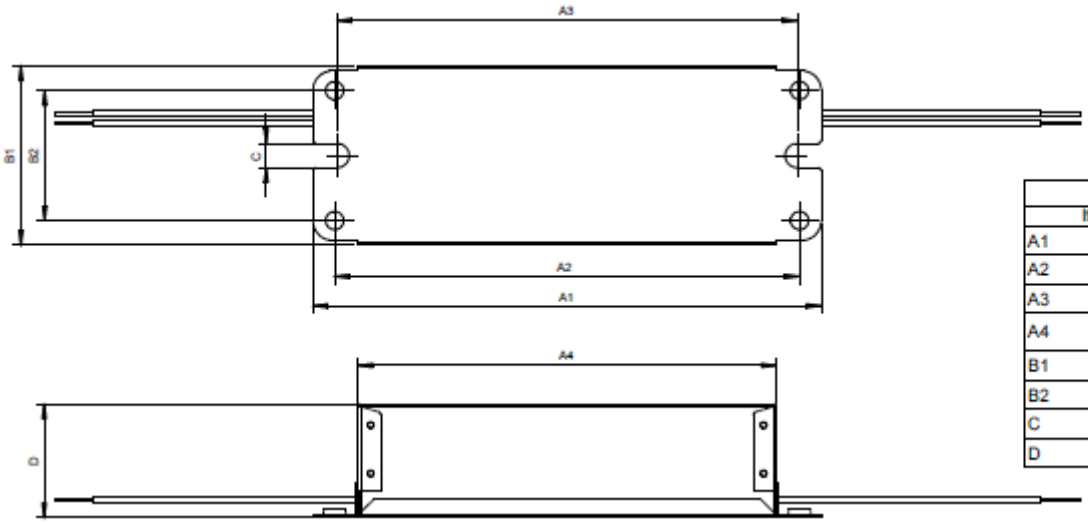

Data Sheet	
Item	Dimension
A1	167.5
A2	153.2
A3	151.6
A4	137.8
B1	59.2
B2	42.9
C	7.9
D	37.5

Logistical Data

Specification item	Value
Product Name	Xitanium 150W 1.05A 230V Y
Logistics Code 12NC	9290 014 00580
Pieces per Box	12

Graphs

Operating window

Efficiency (Tcase = 70°C)

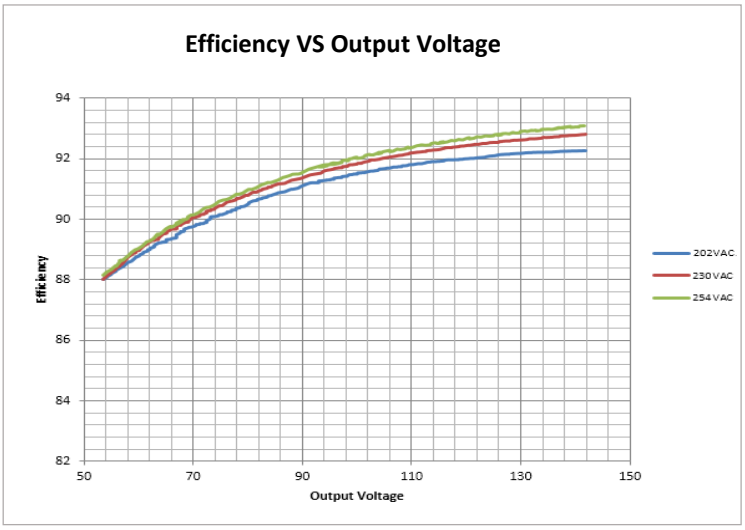

Power Factor (Tcase = 70°C)

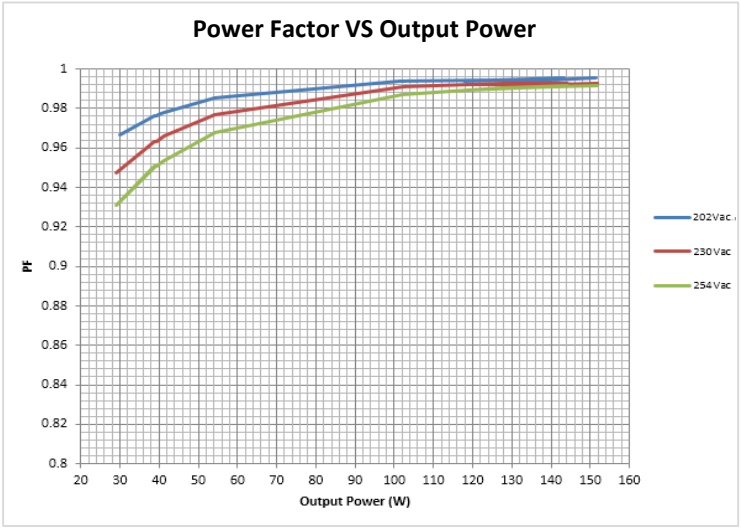

Total Harmonic Distortion (Tcase = 70°C)

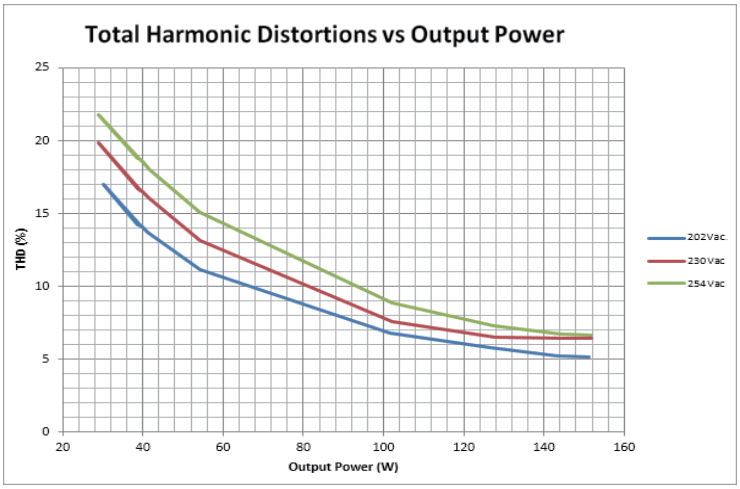

Lifetime vs Tcase

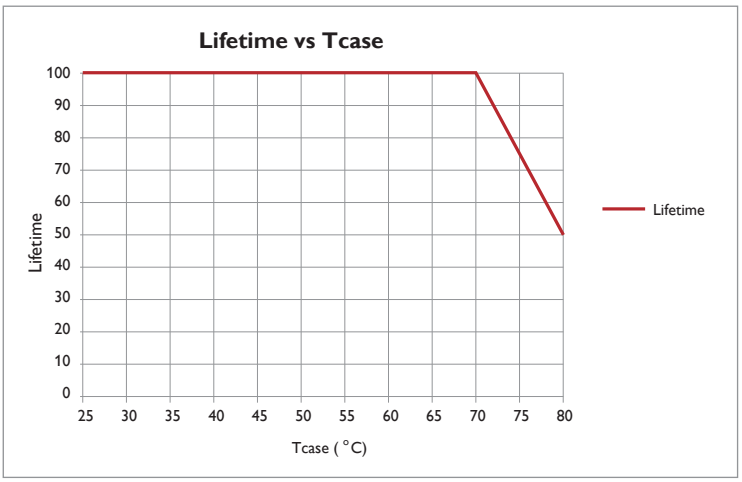

- Failure rate information based upon MTTF modeling: 90% survival at end of life @ Tcase <=80°C
- Failure rate information based upon field call rate data: <0.01% per 1K hour @ Tcase <=80°C

©2015 Koninklijke Philips Electronics N.V.

All rights reserved. Reproduction in whole or in part is prohibited without the prior written consent of the copyright owner. The information presented in this document does not form part of any quotation or contract, is believed to be accurate and reliable and may be changed without notice. No liability will be accepted by the publisher for any consequence of its use. Publication thereof does not convey nor imply any license under patent- or other industrial or intellectual property rights.

Date of release: April 30, 2015