REVISION RECORD				
REV	ECO	DESCRIPTION	DRFT	DATE

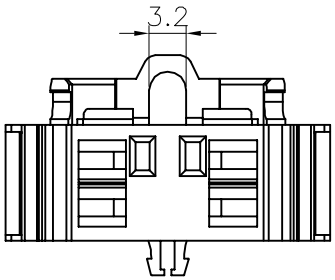

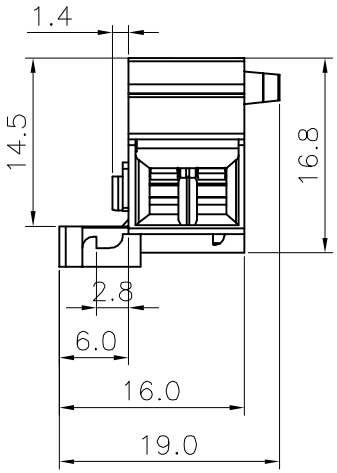

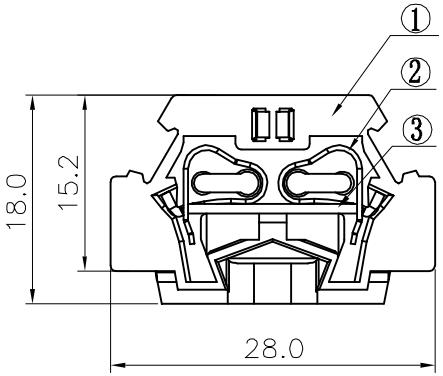

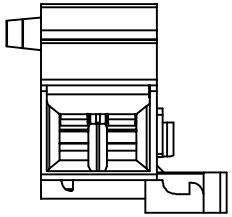

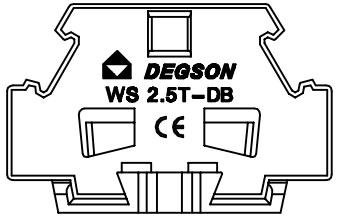

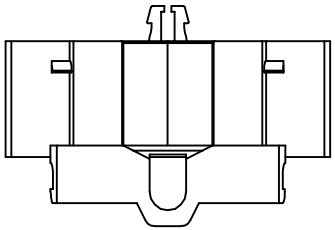

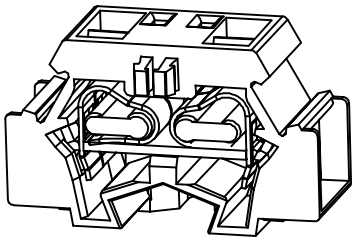

Notes:

1. Rated voltage/current: UL1059 300V/15A
   IEC 500V/24A
2. Operation temperatures: -40℃～+105℃
3. Withstanding Voltage: AC3000V/1Min
4. Insulation Resistance: 5000MΩ/DC1000V
5. Wire Range: 28～14AWG, 2.5mm²
6. Undimensioned Tolerances:

Pitch range in mm			Naminal dimension range in mm					—
to 6	over 6 to 10	over 10 to 24	to 30	over 30 to 60	over 60 to 100	over 100 to 150	over 150	⌒ ▱
±0.10	±0.15	±0.25	±0.2	±0.3	±0.5	±0.7	±1.0	0.05/10

ITEM	NAME OF PART	NO. OF PART	Q'TY	MATERIAL	NOTES
3	WS 2.5T-DB-Current-Carrier	6153B00010(H)	1	Copper	SnCe
2	DG242-5.0-Shrapnel	X000000990(H)	4	Stainless steel	
1	WS 2.5T-DB-Housing	6153A0Y01A(H)	1	PA66	UL94V-0

DETACHED LISTS

MM (INCH)

TOLERANCES EXCEPT AS NOTED

MM
.0 ±
.00 ±
.000 ±

ANGLES ± 1°

THIRD ANGLE PROJECTION

DFTO Yangys	DATE 07/02/08"	
CHKD	DATE	
MFO	DATE	
APPVL	DATE	
MATERIAL :		
G.E :		
FINISH :		
SCALE : 1:1		

DEGSON ® 宁波高正电子有限公司 DEGSON ELECTRONICS CO., LTD

NAME WS 2.5T-DB-01P-1Y-00A(H)

DRAWING NO. WS 2.5T-DB-E01 /PART NO.

SIZE A3 REV T0 07/02/08"

DO NOT SCALE DRAWING

SHEET 1 OF 1