未注公差/General tolerances(mm)														
0 ~ 3	>3 ~ 6	>6 ~ 10	>10 ~ 18	>18 ~ 30	>30 ~ 50	>50 ~ 80	>80 ~ 120	>120 ~ 180	>180 ~ 250	>250 ~ 315	>315 ~ 400	>400 ~ 500	>500	0.1/10
±0.12	±0.18	±0.22	±0.26	±0.31	±0.37	±0.57	±0.80	±0.93	±1.05	±1.15	±1.60	±2.20	±2.50	±2°

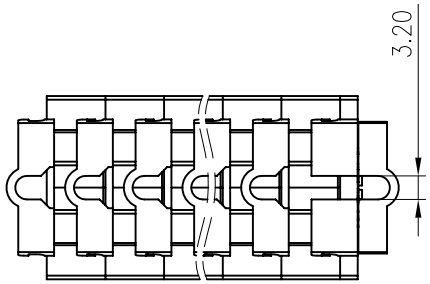

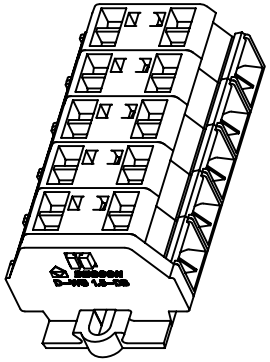

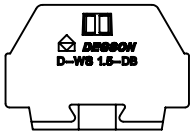

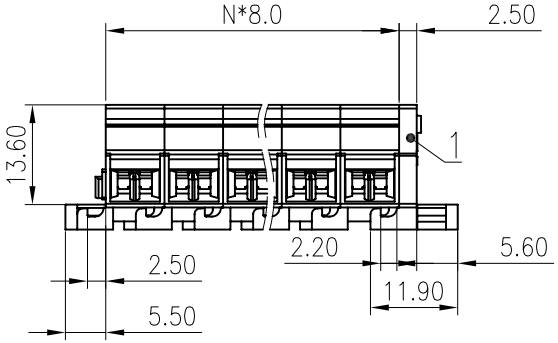

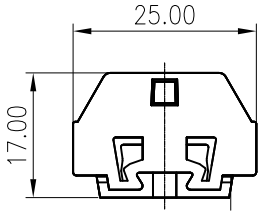

Out of 1

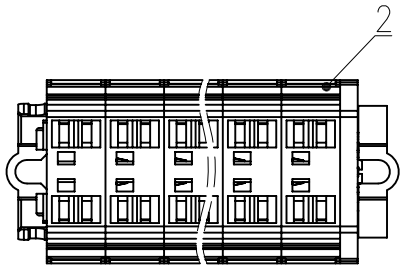

ITEM	NAME OF PART	MATERIAL	NOTES
2	WS1.5T-DB-01P-1Y-00A(H)	/	/
1	D-WS1.5-DB-01P-1Y-00A(H)	/	/

UL 标准/UL Standard:	B	C	D
额定电压/电流/Rated Voltage(V)/Current(A)	300/10	300/10	300/10
EC 标准/IEC Standard:			
过压类别/Overvoltage Category/污染等级/Pollution Degree	III/3	/	/
额定电压/电流/Rated Voltage(V)/Current(A)	800/17.5	/	/
额定脉冲电压(KV)/Rate Impulse Voltage(KV)	8	/	/
线径范围(硬线和软线)/Wire Range(rigid and flexible)(mm^2/AWG)	0.2~1.5/28~16		
间距/Pitch(mm)/线数范围/Poles	8.0/XXP		
剥线长度/Stripping length(mm)	8-9		
使用温度范围/Operating temperature(°C)	-40~+105		
符合RoHS环保要求/Conform to RoHS	Yes		
标准颜色编号/Standard color number: PANTONE / RAL	/		

MATERIAL: / SURFACE: /

MAT NO.:

STATUS: /

APPD:

CHKD: C C 2022.04.21

DRFT: Chen DH 2022.04.21

DEGSON®

宁波高松电子有限公司
NINGBO DEGSON ELECTRICAL CO., LTD

NAME: WS1.5T-DB-XXP-1Y-01A(H)

DRAWING NO.: 11000852 REV D0-2

TYPE: CUSTOMER DRAWING SCALE: 1:1 SHEET 1/1

SIZE: A4 mm (inch)

REV	ECN	DESCRIPTION	DRFT	DATE
D0-2				

Transfer or duplication of this document as well as the utilization or communication of its contents are prohibited unless explicit authorization is granted. Violations will be liable for compensation. All rights reserved for patent, utility model or designs registrations. 除非经予明确授权，否则禁止转让、复制、利用、交流本文件的内容，侵犯者将负赔偿责任。本公司保留对涉及发明、实用新型或外观专利的所有权利。