2000W, 200-480Vac Input, Triple Output Non-isolated LED Driver

Product Datasheet

The global certified TYKT2K0-C is a non-isolated extremely wide input smart LED driver with multiple output. 20kV surge protection level, 100khour long life and 7-year warranty provide high confidence to luminaire users. It supports not only traditional 4-in-1 control, but also D4i and DMX/RDM protocols. NFC and cable programming are both available. All around protections including digital OTP (internal and external by NTC) with auto-recovery secure 24hour non-stop operation for luminaires.

- Features 2
- Model List 2
- Technical Data 3
- Safety/EMC Compliance 4
- Dimming 5
- Programming 7
- Lifetime vs. Case Temperature 8
- Power Factor vs. Load 9
- THD vs. Load 9
- Efficiency vs. Load 10
- Inrush Current 10
- Dielectric Strength 11
- Tc Point 11
- Packaging Information 12
- Connection 13
- Mechanical Design 15
- Output Operation Range 15
- Revision History 16

Aug. 20, 2024, all rights reserved.

Features

- Absolute Supply Voltage: 180~528Vac
- 20kV Built-in Surge Protector
- 97% Efficiency Max.
- Low Frequency Ripple (Broadcasting Level)
- 0.1% Minimum Analog Output Dimming
- Fast Dimming and Quick Flashing
- Low Inrush Current
- 100,000Hour Life @ Tc=75℃
- 7 Year Warranty @ Tc<=75℃
- Lumen Compensation
- +/-2% Output Current Accuracy
- 0-10V/PWM/D4i/DALI2/DMX/RDM Support
- Daisy Chain Control Connection
- All-Channel Sync Mode (Parallel Support)
- 1% Energy Report Accuracy
- NFC Programmability
- Glow-free Dim Off
- 24V 3W Auxiliary Power
- IP66 and IK08 Enclosure
- Safety according to UL8750, EN 61347-1, 61347-2-13, 62384

Model List

Model Number	Input Voltage Range	Output Power/Channel	Output Voltage	Full Power Settable Current Min	Full Power Settable Current Max	Certification
TYKT2K0-C190-**XY**C	250~528Vac 180~250Vac	666W x 3 600W x 3	212-500Vdc	1.3A	1.9A	UL/ENEC/CB/RCM/ ONGOING

XY=	Dimming Method	Programmable	Vaux	Dim-off
ER	0-10V + PWM	NFC	24V 120mA	√
AR	D4i + DALI2	NFC	24V 120mA	√
MR	RDM + DMX	NFC	24V 120mA	√
GR	RDM + DMX + D4i + DALI2 Auto Detective	NFC	24V 120mA	√

Technical Data

Input Voltage	180~528Vac
Input Frequency	47~63Hz
Power Factor	>0.9@60-100%load, refer to PF vs. Load curve
THD	<15%@60-100%load, refer to THD vs. Load curve
Input Current	10.1Amax@208Vac & Full-Load, 9.5Amax@220Vac & Full-Load 7.6Amax@277Vac & Full-Load, 4.6Amax@480Vac & Full-Load
Inrush Current	See Inrush Current Section in the datasheet
Leakage Current	0.75MIU max @480Vac 60Hz, UL8750 0.7mA max @400Vac 50/60Hz, IEC60598-1
Input Under Voltage	Shut down and auto-restart
Surge Protection	Line to line 20kV, line to ground 20kV, IEC 61000-4-5
Current Accuracy	±2%Io
Ripple Current	Ipk-pk: low frequency (<=3kHz) 1%Io typ., 2%Io max. high frequency (>3kHz) 12%Io typ., 15%Io max.
TLA (Temporal Light Artifacts)	PstLM<0.02, SVM<0.05, IEC-61547-1
Percent Flicker	1% max. Broadcasting level, GB/T-38539-2020
Setup Time	2s max
Overshoot	10% Io max & LED Load
Output Over Voltage	125% Vomax, typ.
Short Circuit	Auto recovery. The output recovers when short is removed.
Over Temperature	Lower the output current when Tc≧100±10℃; Auto Recovery When Tc≦70±10℃
Operating Temperature	Case Temperature Tc=-40℃~+85℃ ; 10%RH～100%RH
Storage Temperature	-40℃～+85℃; 5%RH～100%RH
MTBF	≥320,000 hours, 75℃ case temperature (MIL-HDBK-217F)
Lifetime	≥100,000 hours, 75℃ case temperature, refer to life vs. Tc curve
Case Temperature	85℃ max, marked in the Tc point of label
Dimension	500x152x90 mm
Net Weight	5900g
Packing	See Package Information Section in the datasheet

Notes: Unless specified, all the test results are measured in 25℃ room temperature.

Safety/EMC Compliance

Safety Standards	Description
UL8750	Light emitting diode(LED) equipment for use in lighting products
UL1012	Power units other than class 2
IEC 61347-1	Lamp control gear Part 1: general and safety requirements
IEC 61347-2-13	Lamp control gear Part 2-13: particular requirement for d.c. or a.c. supplied electronic control gear for LED modules
IEC 62384	DC or AC supplied electronic control gear for LED modules - Performance requirements
EMC Standards	Description
IEC 55015	Conducted emission test & radiated emission test
IEC 61000-3-2	Harmonic current emissions; Class C
IEC 61000-3-3	Voltage fluctuations & flicker
FCC Part 15	ANSI C63.4:2009 Class B
IEC 61000-4-2	Electrostatic discharge (ESD): 8 kV air discharge, 4 kV contact discharge
IEC 61000-4-3	Radio frequency electromagnetic field susceptibility test (RS)
IEC 61000-4-4	Electrical fast transient (EFT)
IEC 61000-4-5	Surge immunity test
IEC 61000-4-6	Conducted radio frequency disturbances test (CS)
IEC 61000-4-8	Power frequency magnetic field test
IEC 61000-4-11	Voltage dips
IEC 61547	Electromagnetic immunity requirements applies to lighting equipment

Dimming

Parameter	Min.	Typ.	Max.
0-10V Vdim Sourcing Current	100uA	150uA	200uA
0-10V Vdim Allowed Input Voltage	-20 V		20 V
0-10V Dimming Range	0.1% (Vdim=1V)	Linear	100% (Vdim=9 or 10V)
PWM Dimming Range	0.1% (Duty=10%)	Linear	100% (Duty=90 or 100%)
Dim off threshold	0.4V or 4%	0.5V or 5%	0.6V or 6%
Dim on threshold	0.6V or 6%	0.7V or 7%	0.8V or 8%
PWM High	3.8V		10V
PWM Low	0V		0.6V
PWM Frequency	300Hz		2kHz
External PWM Controller Current Sinking Capability	300uA		
DALI Interface Standard	IEC62386-101,102,150,207,250,251,252,253		
Dimming Range	0.1%	-	100%
DA1,DA2 High Level	9.5V	16V	22.5V
DA1,DA2 Low Level	-6.5V	0	6.5V
DA1,DA2 Current	0		2mA
Bus Power Supply Voltage	12Vdc	16Vdc	20Vdc
Bus Power Supply Current	52mA	-	60mA
Auxiliary Power Voltage	21.6V	24V	26.4V
Auxiliary Power	3W	-	4W
Auxiliary Power Endurance @6W	3.8ms/6ms	-	4.5ms/6ms
Auxiliary Power Endurance @10W	1.8ms/6ms	-	2.2ms/6ms
Standby Power (Dim Off Mode)		0.5W @220Vac 1W @480Vac	
DALI Bus Power Supply Current	52mA	-	60mA
DMX Dimming Range	0.1%	-	100%
DMX+ & DMX- Voltage	-6V		6V
DMX to Ground Resistance	25Mohm		
Logic 0/1 (DMX+ to DMX-) Threshold		0.2V	
Communication Baud Rate		250kbps	
On/Off Flashing Rate with DMX		40fps	
DMX Dimming Range	0.1%	-	100%
Fast Dimming On-Off Transition		50ms	
Fast Dimming 10-100% Io Transition		30ms	

- **Quick Flashing Mode**

Parameter	Min.	Typ.	Max.
0-10V Dimming Models	-	-	30fps
DALI and DMX Dimming Models	-	-	44fps

- **Default Dimming Curves**
- **0-10V/PWM Dimming Curve (Minimum dimming level can be customized by PC software)**

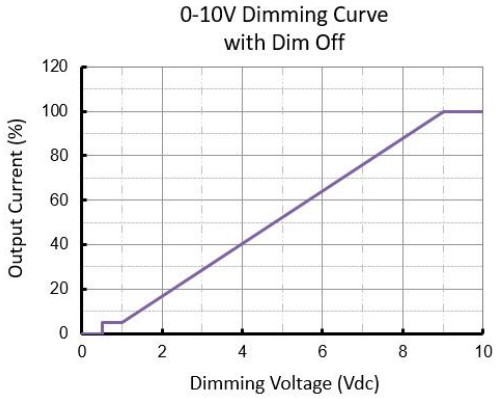

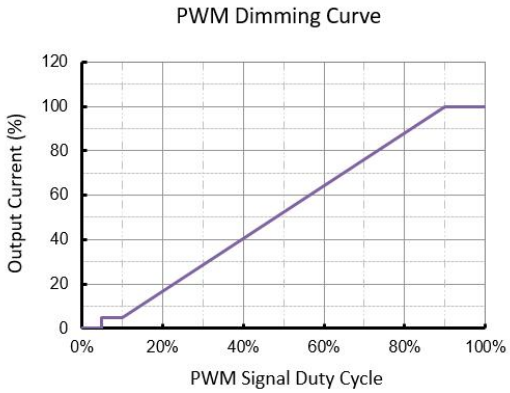

- **DALI/D4i Dimming Curve**

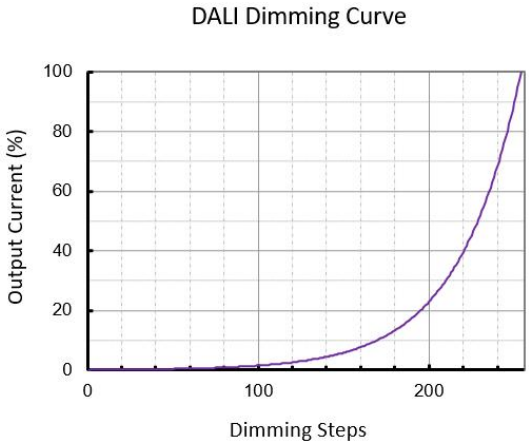

- **DMX512/RDM Dimming Curve**

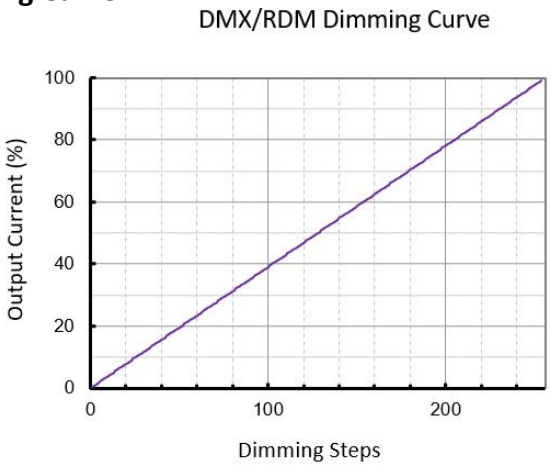

Note: Both DALI and DMX dimming curves can be customized to be linear or logarithmic as default.

Programming

- **Programmable Functions**

  uPowerTek LED drivers offer a range of configurable functions to meet specific lighting requirements. The Output Current, Dimming Mode, Dim Off/On Voltage Threshold, and Minimum Dimming Level can be set as basic programming functions. Users can also benefit from programming Thermal Protection, DALI/D4i Features, and DMX addressing. And Sync Mode provides possibility to control multiple channels by single DALI or DMX address.

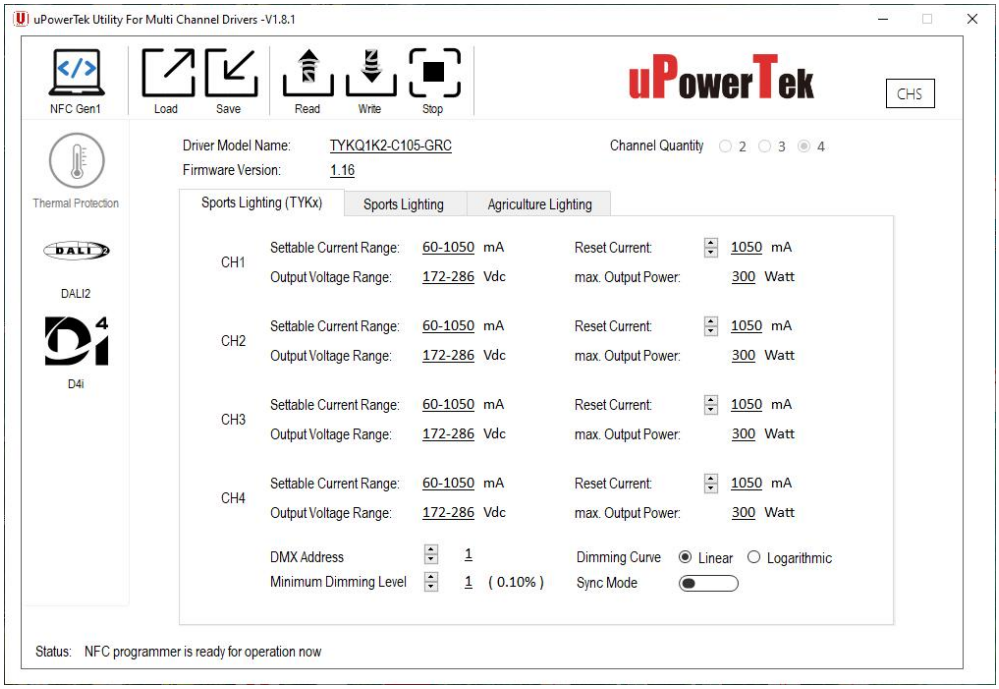

uPowreTek Programming Software Interface

- **Required Equipment**

  To program uPowerTek LED drivers, users will need specific equipment based on their preferred method. For NFC wireless programming, users can use a smartphone with either IOS or Android, the uPowerTek NFC Programmer, or the FEIG NFC Programmers. These tools ensure a seamless and efficient setup process, realizing precise customization of the LED driver settings.

NFC Programmer V1

NFC Programmer V2

FEIG NFC Programmer

Android or iPhone

- **Connection Guide**

  This guide provides simple connection diagrams to help users understand the programming system. For more detailed operating instructions, including step-by-step procedures and additional configurations, please visit our website. You can download the comprehensive user manual and necessary software from the following link: https://www.upowertek.com/download-2/.

PC NFC Programming

Cellphone NFC Programming

■ Lifetime vs. Case Temperature

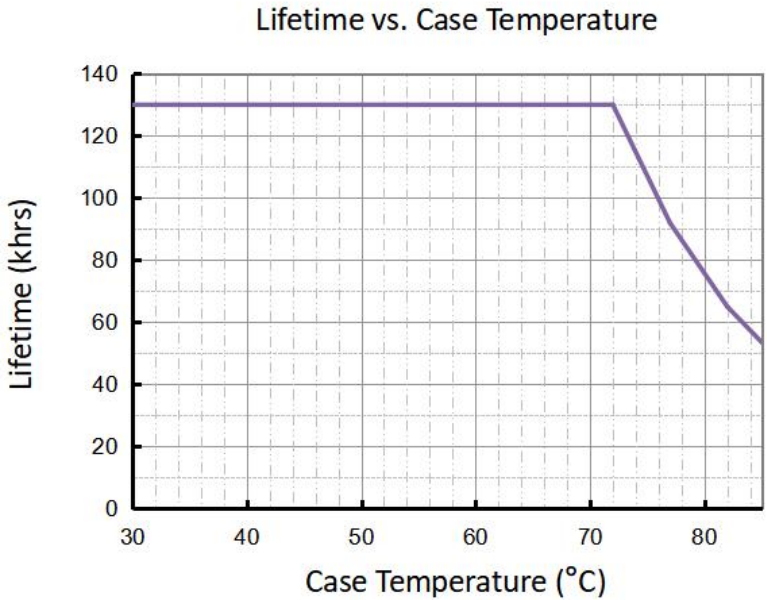

(End of Life: Maximum Failure Rate=10%)

Power Factor vs. Load

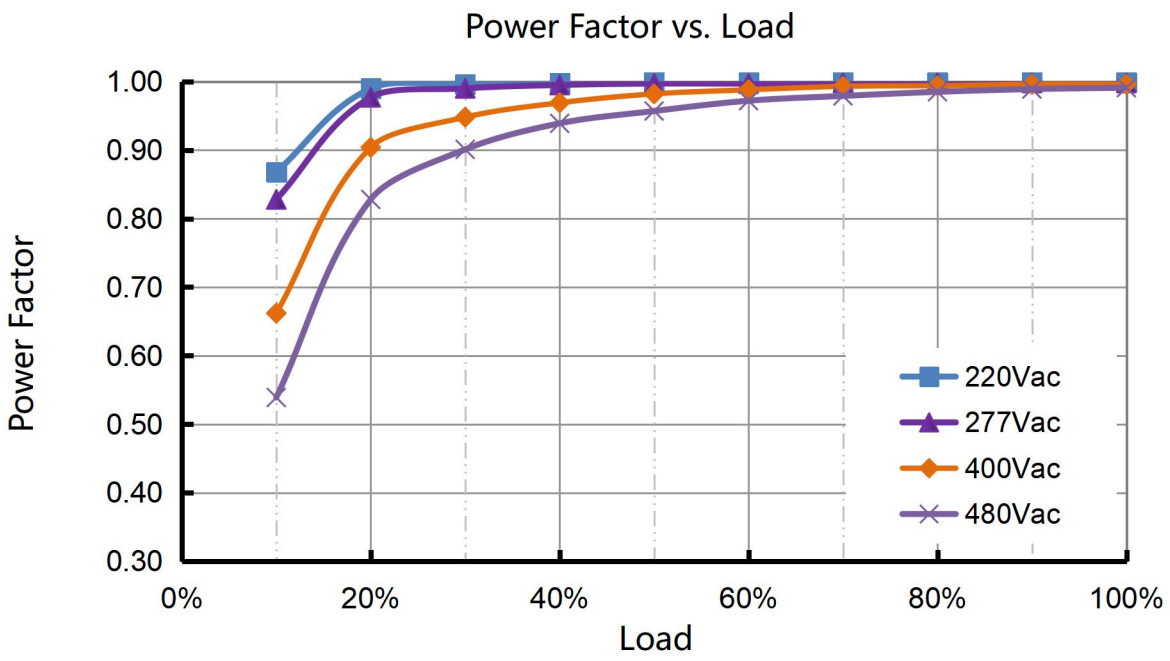

THD vs. Load

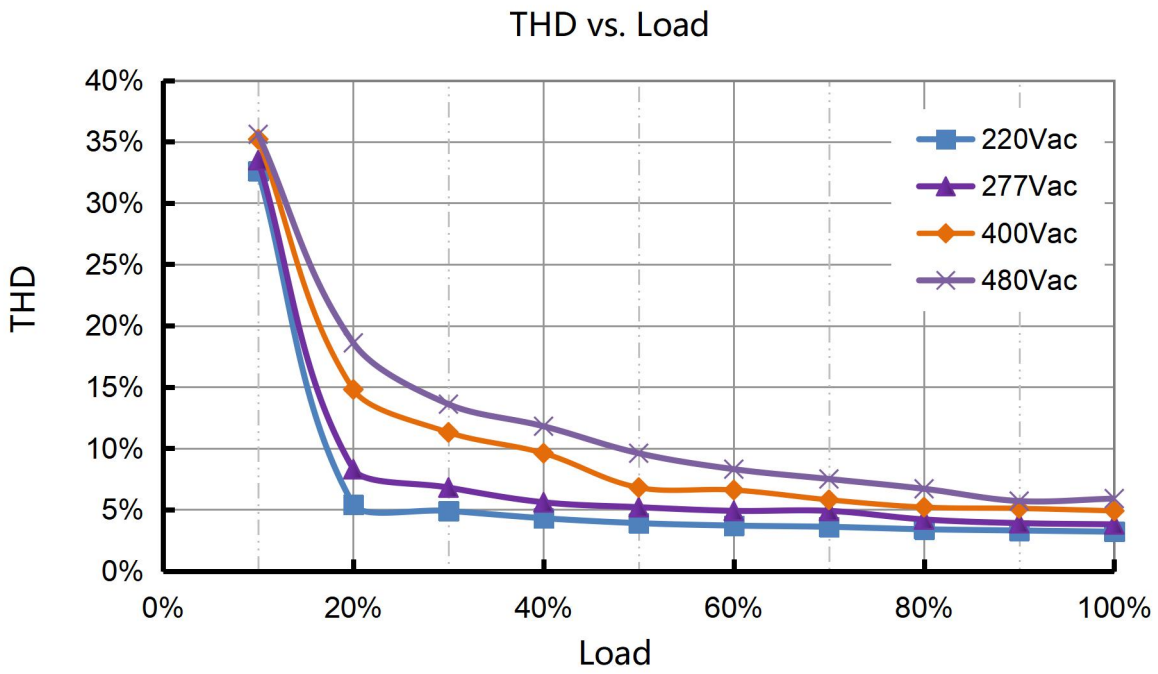

Efficiency vs. Load

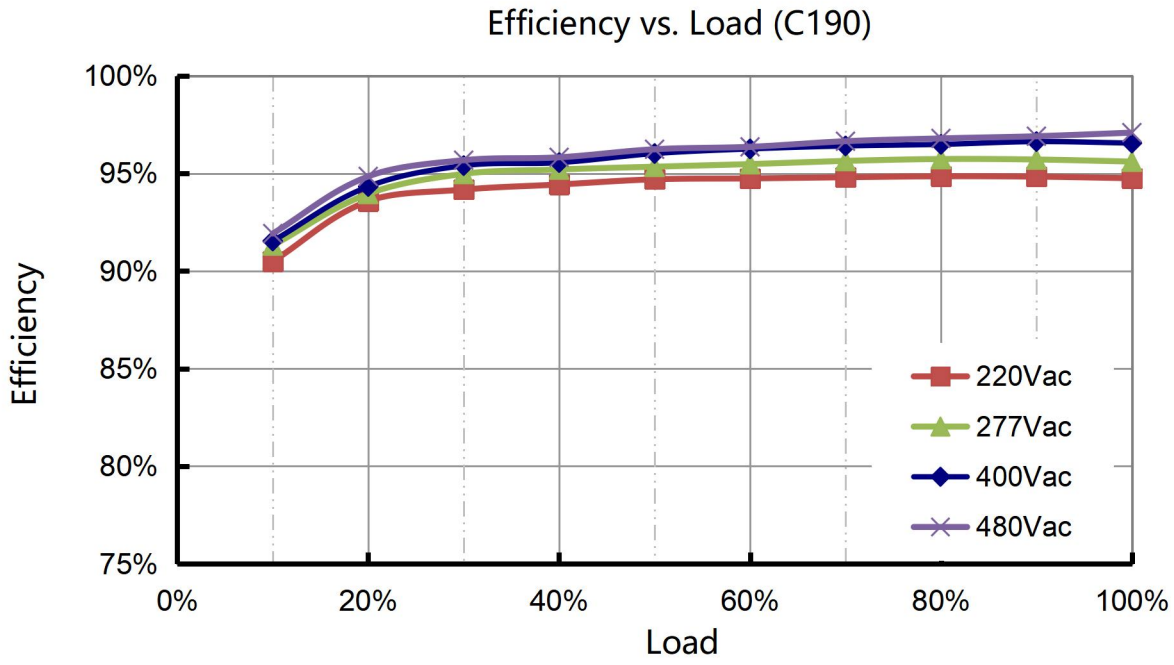

Inrush Current

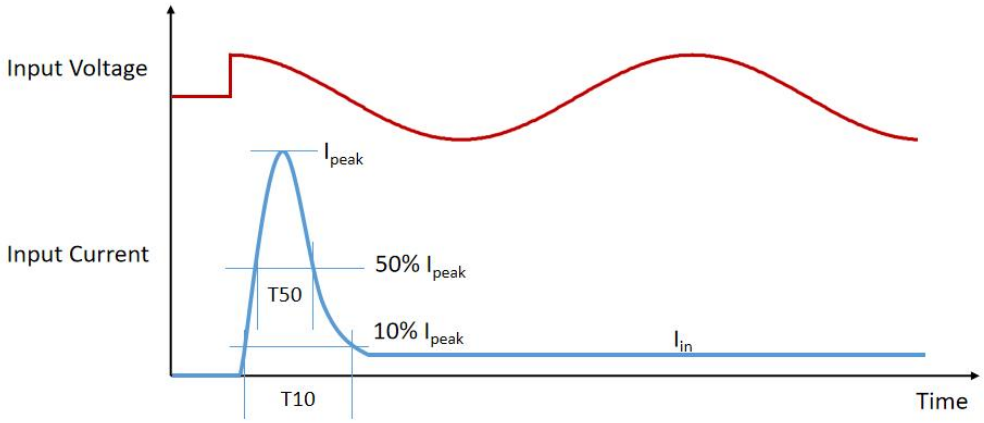

Input Voltage	I_{peak}	10% -10% T10 Duration	50% -50% T50 Duration
220Vac	6A	18.4ms	8ms
277Vac	8A	20ms	9ms
400Vac	15A	25ms	11ms
480Vac	15.3A	25ms	11ms

- **MCB Suggestion**

Type	B10	B16	B25	B32	C10	C16	C25	C32	D10	D16	D25	D32
220Vac	0	1	1	2	0	1	1	2	0	1	2	2
277Vac	0	1	1	2	0	1	2	2	1	1	2	3
400Vac	0(x3)	1(x3)	1(x3)	2(x3)	0(x3)	1(x3)	1(x3)	2(x3)	0(x3)	1(x3)	2(x3)	2(x3)
480Vac	0(x3)	1(x3)	1(x3)	2(x3)	0(x3)	1(x3)	2(x3)	2(x3)	1(x3)	1(x3)	2(x3)	3(x3)

Three phase wiring suggestion.

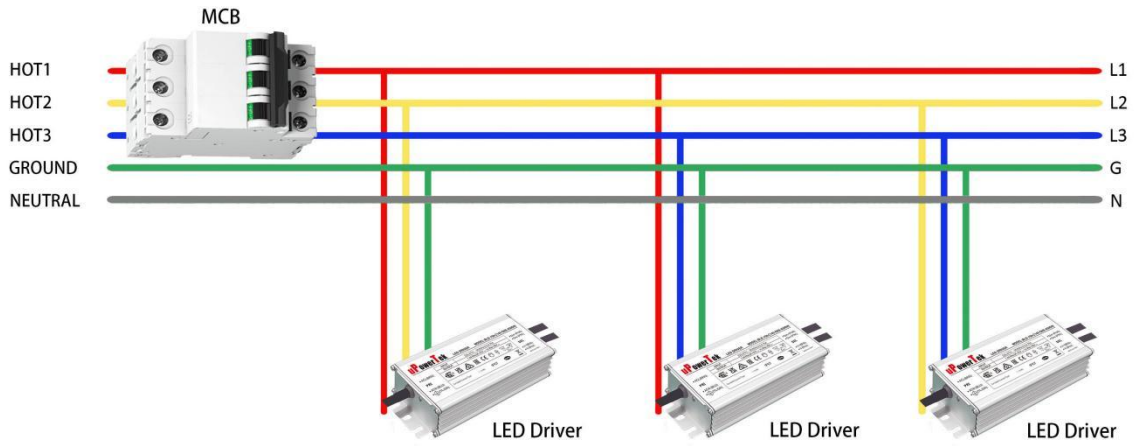

Dielectric Strength

Unit: Vac	Input	Output	Dimming	Case
Input	-	-	3920	1960
Output	-	-	3920	1960
Dimming	3920	3920	-	1960
Case	1960	1960	1960	-

Tc Point

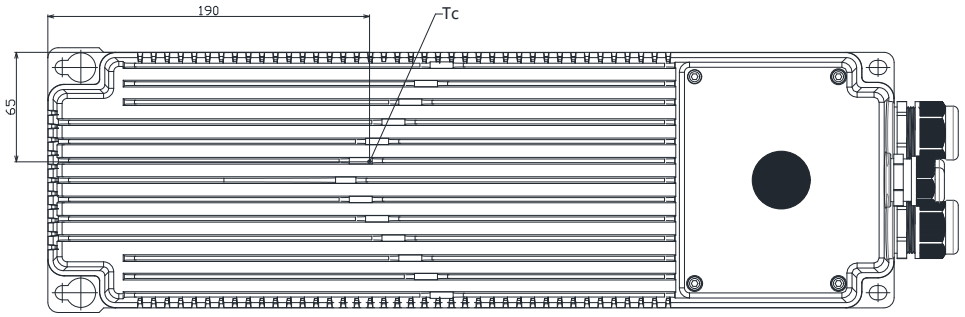

Packaging Information

Typical Carton Dimension(L×W×H)	590×195×160 mm
EPE Lining/EPE	2pcs/carton
LED Drivers/LED	1pcs/carton
Net Weight	5.9kg/ carton
Gross Weight	6.3 kg/ carton
Ferrite Core	2pcs/carton

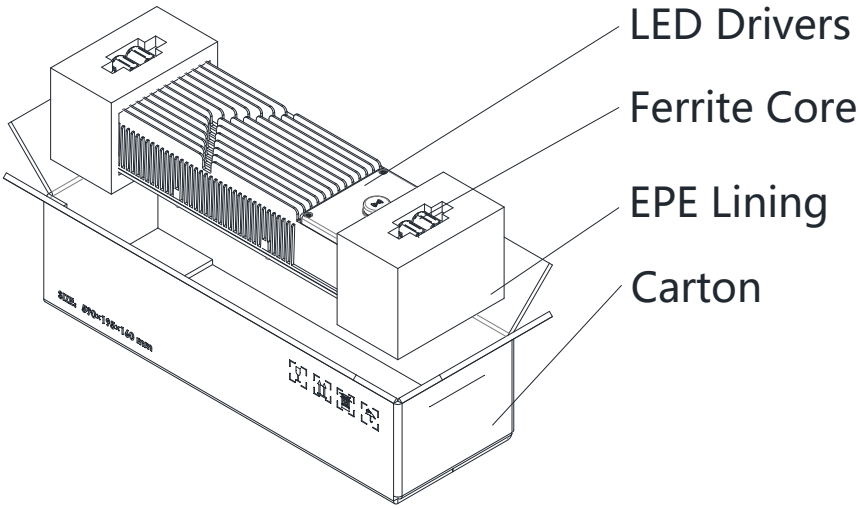

Connection

- **Waterproof Connectors**

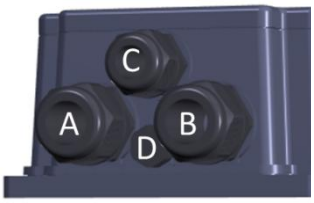

Part	Description	Type	Cable Diameter (mm)	AWG	Cross Section (mm2)	Torque (N*m)
A	Input	M25	13~18	#15~#12	1.5~2.5	5.5
B	Output	M25	13~18	#15~#12	1.5~2.5	5.5
C	Daisy Chain Dimming	M20	6~12	#18~#12	0.75~2.5	3.5
D	Ventilation Valve	-	-	-	-	-

- **Terminal Block Definition**

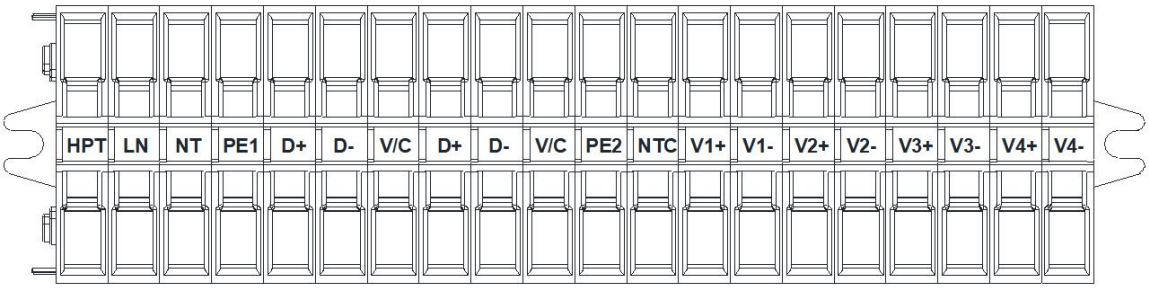

Note: Wire Stripping Length: 8-9mm

Position	Name	Description
1	HPT	Remove the cable connection when doing the hi-pot test
2	LN	Line Input
3	NT	Neutral Input or Line Input with 3 phase electricity
4	PE1	Ground or Protective Earth from input
5	D+	0-10V + for -ERC models, DALI or DMX Signal + for -GRC models
6	D-	0-10V - for -ERC models, DALI or DMX Signal - for -GRC models
7	V/C	Vaux Power @ 0-10V or DALI dimming, COM for shielding @DMX dimming
8	D+	Daisy chain connection for D+
9	D-	Daisy chain connection for D-
10	V/C	Daisy chain connection for COM@DMX, NOT for Vaux Power@0-10V or DALI
11	PE2	Ground or Protective Earth to light fixture
12	NTC	External NTC signal for luminaire over temperature protection
13	V1+	LED Channel 1 +
14	V1-	LED Channel 1 -
15	V2+	LED Channel 2 +
16	V2-	LED Channel 2 -
17	V3+	LED Channel 3 +
18	V3-	LED Channel 3 -
19	V4+	-
20	V4-	-

- **DMX (RDM) Mode and D4i (DALI) Mode Connection**

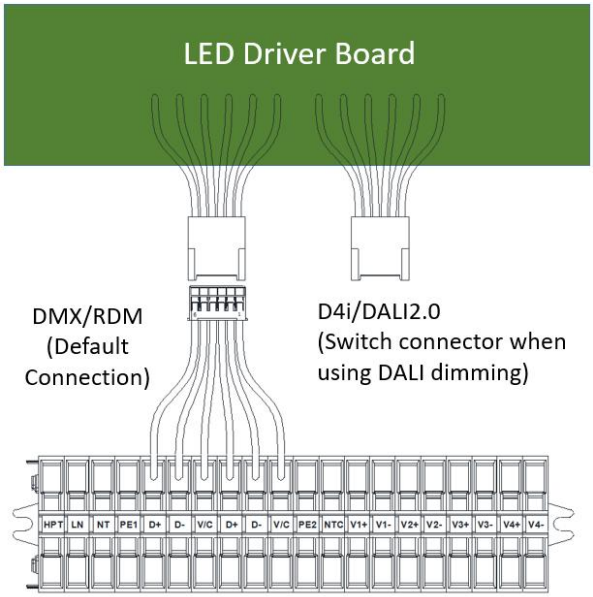

- **Over Temperature Protection by NTC**

Besides the internal thermal protection, external thermal protection is also provided by TYK series. Compared with other uPowerTek drivers, TYK series only offers single connector for NTC rather than 2 connectors like NTC+ and NTC-. The suggested thermal detection circuitry is a constant current regulator and the NTC pin current is dependent on the NTC (R1) resistance thus TYK gets the current information to know the temperature of the luminaire. And the protection parameters can be set by uPowerTek programming software.

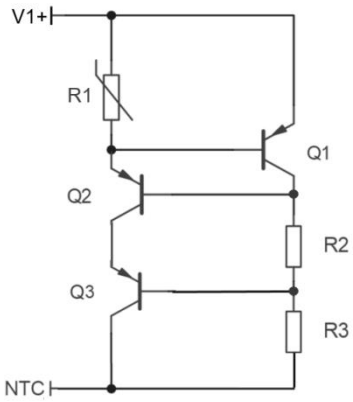

Reference	Part	Manufacturer	Description
Q1/Q2/Q3	PBHV9050T	NEXPERIA	500V 150 mA PNP Transistor
R1	-	-	10kOhm Thermistor
R2/R3	-	-	500V 1MOhm Resistor 1% -

This connection saves one wire by sharing output positive and please contact with us for traditional NTC connection with dual wires of NTC+ and NTC-.

Mechanical Design

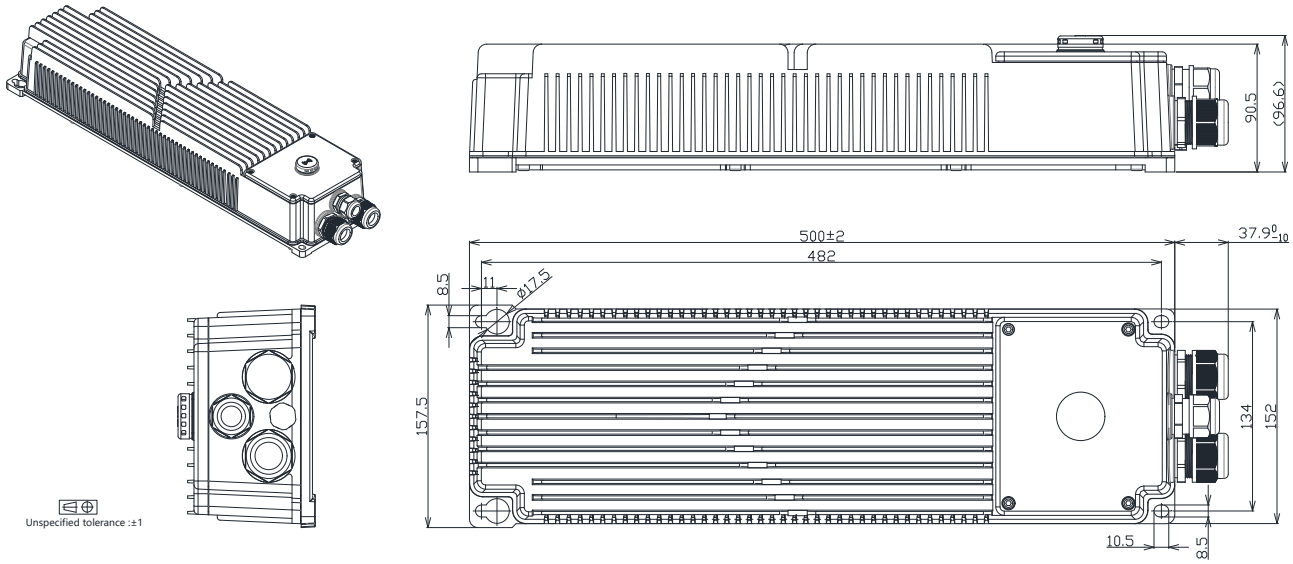

Output Operation Range

Model	Typical Set Output Current (mA)	Max Output Power (W) Total/CH	Output Voltage Min (V)	Output Voltage Max(V)
-C190	1900	2000/666	210	351
	1800	2000/666	222	370
	1700	2000/666	235	392
	1600	2000/666	250	416
	1500	2000/666	266	444
	1400	2000/666	285	476
	1333	2000/666	300	500
	1200	1800/600	300	500
	1100	1650/550	300	500
	1000	1500/500	300	500
	…	…	…	…
	133	200/66	300	500

Revision History

Revision	Date	Contents
A	2024-02-28	1. Product release
B	2024-5-14	1. ARC MRC models added
C	2024-6-22	1. Package information updated.
D	2024-8-20	1. Fast dimming and quick flashing description added 2. Percentage Flicker added 3. Power factor, THD, efficiency curves updated by 10-100% load range 4. MCB usage and driver quantity section added 5. Inrush current data updated