D1RFRD006

REVISION RECORD				
REV	ECN	DESCRIPTION	DRFT	DATE
1	10-0145	增加UL商标及参数	COCO	05/24/10"
2	14-0126	PCMB系列产品结构统一(产品减胶)	Apple	05/14/14"

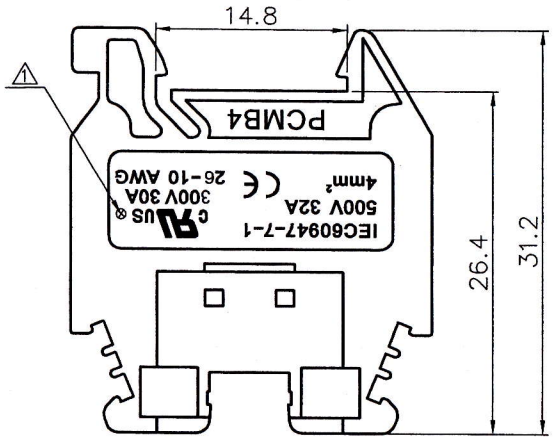

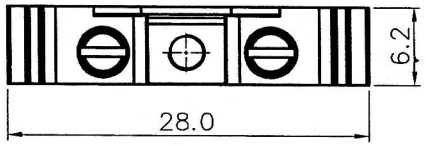

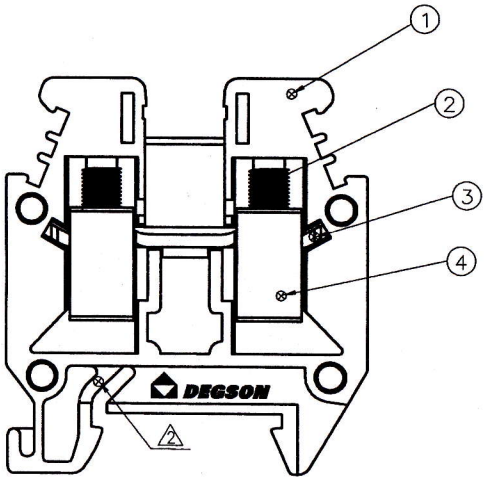

NOTES:
1.PITCH: 6.2MM
2.RATED VOLTAGE/CURRENT: UL: 300V/30A
IEC: 500V/32A
3.OPERATION TEMPERATURES: −40°C~+105°C
4.WITHSTANDING VOLTAGE: AC3000V/1MIN
5.INSULATION RESISTANCE: 5000MΩ/1000V
6.WIRE RANGE: 26~10AWG, 4MM²
7.TORQUE VALUE: 5.10KGF.CM
8.UNDIMENSIONED TOLERANCES:

PITCH RANGE IN MM			NOMINAL DIMENSION RANGE IN MM					—
TO 6	OVER 6 TO 10	OVER 10 TO 24	TO 30	OVER 30 TO 60	OVER 60 TO 100	OVER 100 TO 150	OVER 150	⌒ ▱
±0.10	±0.15	±0.25	±0.20	±0.30	±0.50	±0.70	±1.00	0.05/10

宁波高正电子 内部发行 2014.5.27 文管中心 研发

ITEM	NAME OF PART	NO. OF PART	Q"TY	MATERIAL	NOTES
4	PCDK4 CAGE	X000001840(H)	2	BRASS	Ni PLATED
3	PCMB4 CURRENT CARRIER	6075B00010(H)	1	COPPER	Sn PLATED
2	PC2.5B SCREWS	S000001100(H)	2	BRASS	Ni PLATED
1	PCMB4 HOUSING	6075A0Y01A(H)	1	PA66	UL94V-0

DETACHED LISTS

MM (INCH)

TOLERANCES EXCEPT AS NOTED: .X ± .XX ± .XXX ± / .X° ± .XX° ± .XXX° ±

ANGLES ± 1°

THIRD ANGLE PROJECTION

MATERIAL:
FINISH:
PART NO.:
APPD: Jean 05/16/14"
CHKD: Alen 05/15/14"
DRFT: LIN 10/19/06"

DEGSON® 宁波高正电子有限公司 DEGSON ELECTRONICS CO., LTD

NAME: PCMB4-01P-1Y-00A(H)

TITLE: ASSEMBLY DRAWING
DRAWING NO.: PCMB4-E01
REV: T2
DO NOT SCALE DRAWING | SCALE: N/A | SHEET: 1/1