NO	DESCRIPTION	MATERIAL	Q'TY	FINISH	REMARK
1	BODY	BRASS	1	NICKEL	B-N0681-N
2	INSULATION	TEFLON	1	TEFLON	I-0546
3	PIN	BRASS	1	GOLD	P-N0799-G
4	BODY	BRASS	1	GOLD	B-N0320-N

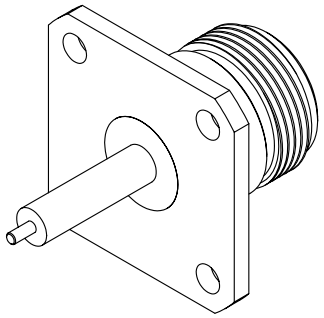

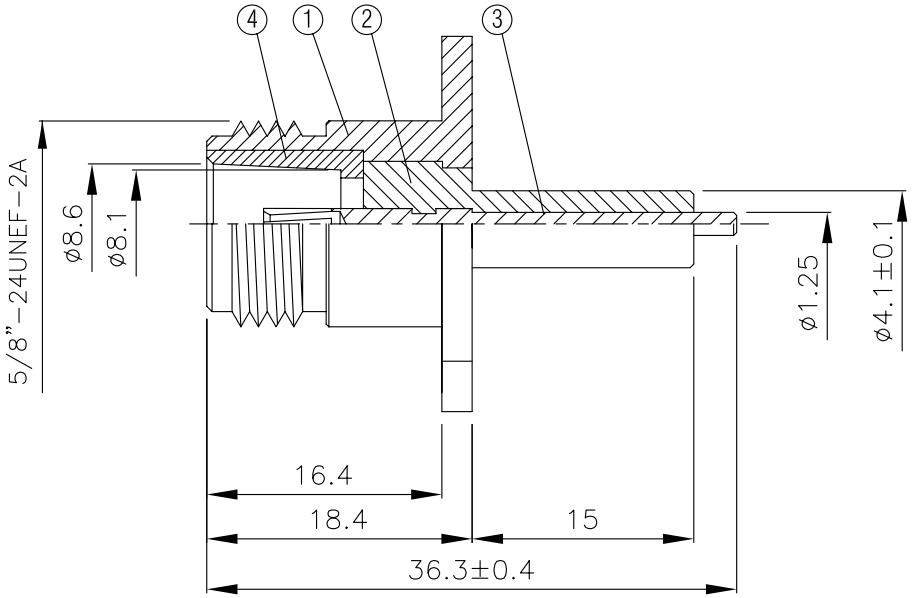

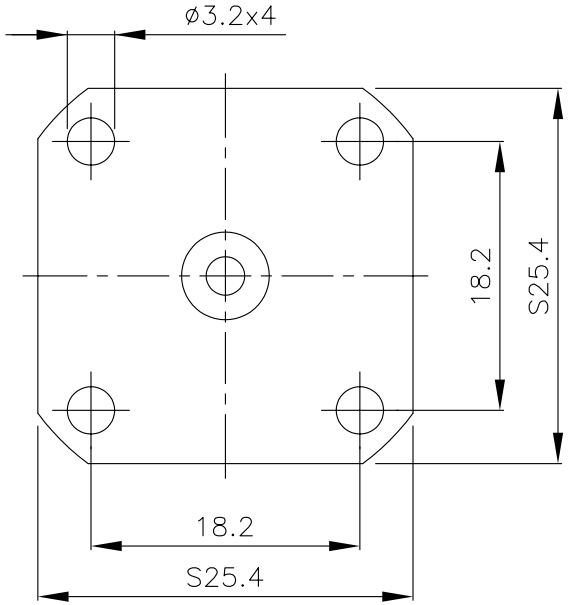

HUS-TSAN GROUP CO., LTD.
P.O.BOX 40-76.TAINAN.TAIWAN,R.O.C.

TITLE: N PANEL FEMALE RECEPTACLES

PART NO.: N-06V9-TGN

DRAWING NO.: N 06V9 TGN

DRAWN	MARY	DATE	95.12.18
CHECKED	黃巧君	DATE	
Q.A.	蘇姿潔	DATE	
APPROVAL	徐燦霖	DATE	
REVISION		DATE	

DIMENSIONS ARE IN MILLMETERS

UNLESS OTHERWISE SPECIFIED TOLERANCE

0.5-5=±0.2 120-315=±1
5-30= ±0.4 315-1000=±1.6
30-120±0.6 1000-2000=±2.4

SCALE 4:1 SIZE A

REVISION	
DESCRIPTION	ENGINEER