| File No. | 189GC25233 | SHEET | 1/1 ⚠1 |
|---|---|---|---|

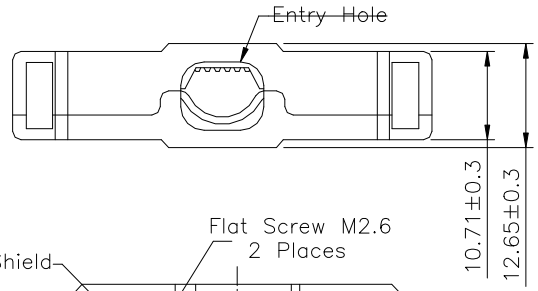


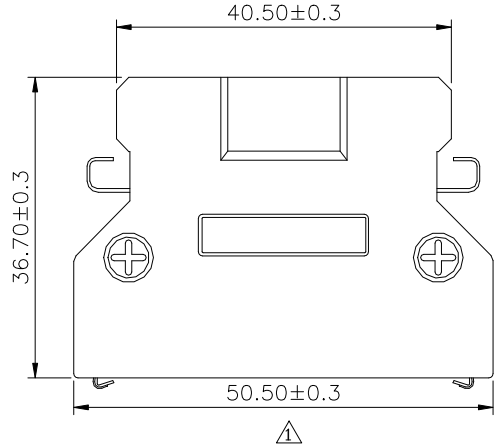


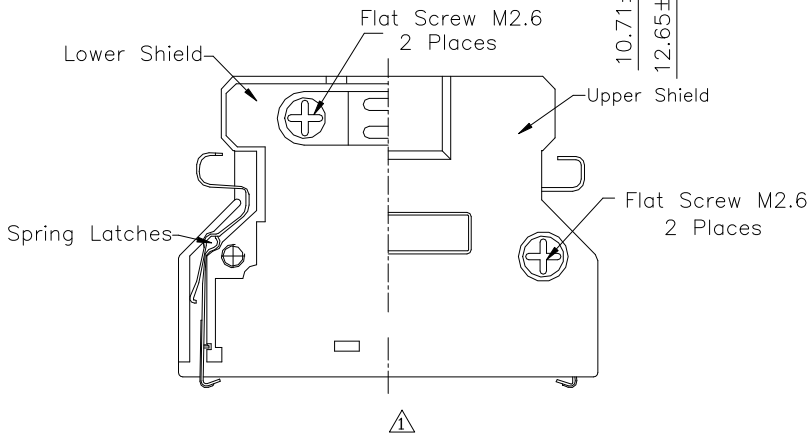


⚠1 SPECIFICATION

Current Rating:0.5 Amp
Withstand Voltage:500V AC
Contact Resistance:35 Milliohms Max.
Insulation Resistance:>500 Megaohms Min.
Operation Temperature:−55˚C~+85˚C
Insulator:PBT(UL94V−0),Black
Contact:Phosphor Bronze
Selective Gold Plated 5u" Over Nickel
Front Shell:Steel,Nickel Plated Over Copper
Back Shell:Zinc Alloy,Nickel Plated Over Copper
Flat Screws:Steel,Nickel Plated Over Copper
Cable Clipper:Steel,Nickel Plated Over Copper
Spring Latches:Stainless Steel
RoHS Compliant

⚠1 HPD 050 P S W − XX − H
(1) (2) (3) (4) (5) (6) (7)

(1) HPD:1.27 SCSI Pin Type
(2) 050:No. Of Position
(3) P:Male
(4) S:Solder Wire
(5) W:Metal Hood Latch Type
(6) XX:Entry Hole Sizes
Blank:ø9.0
11:ø11.0
(7) H:RoHS Compliant

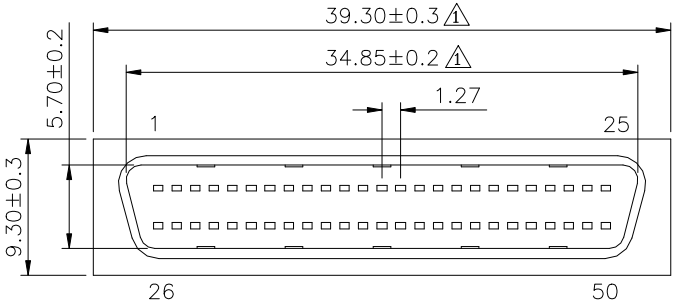


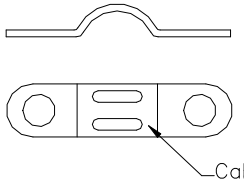


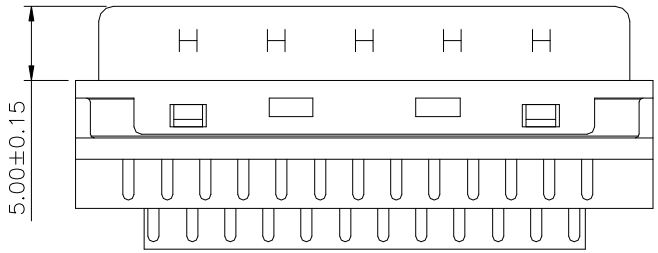


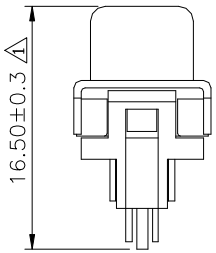


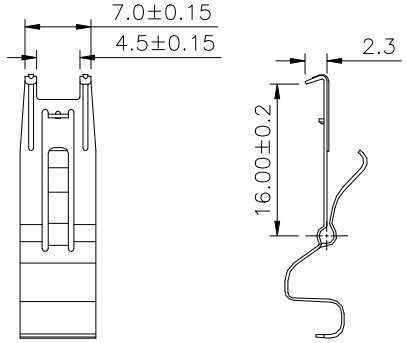


⚠1 Spring Latches

A MEMBER OF AUK GROUP
太聯事業股份有限公司
AUK CONTRACTORS CO., LTD.

| CATEGORY | | APPROVED BY | MEI | UNLESS OTHERWISE SPECIFIED TOLERANCES ARE |
|---|---|---|---|---|
| PART No. ⚠1 HPD050PSW−XX−H | | CHECKED BY | HZF | .X ±0.38 .XX ±0.25 ANG. |
| DRAWING No. HPD050PSW−XX−H | | DRAWING BY | CYP | |
| SCALE | NONE | REV. | B1 | UNIT mm |

| NO. | REV. | REVISIONS | CHK | DATE |
|---|---|---|---|---|
| ⚠1 | B1 | Modify P/N:HPD050PSW−H --> HPD050PSW−XX−H | HZF | 03/25/2016 |
| ⚠0 | B0 | NEW RELEASE | HZF | 03/07/2009 |