NO	DESCRIPTION	MATERIAL	Q'TY	FINISH
1	BODY	BRASS	1	NICKEL
2	NUT	BRASS	1	NICKEL

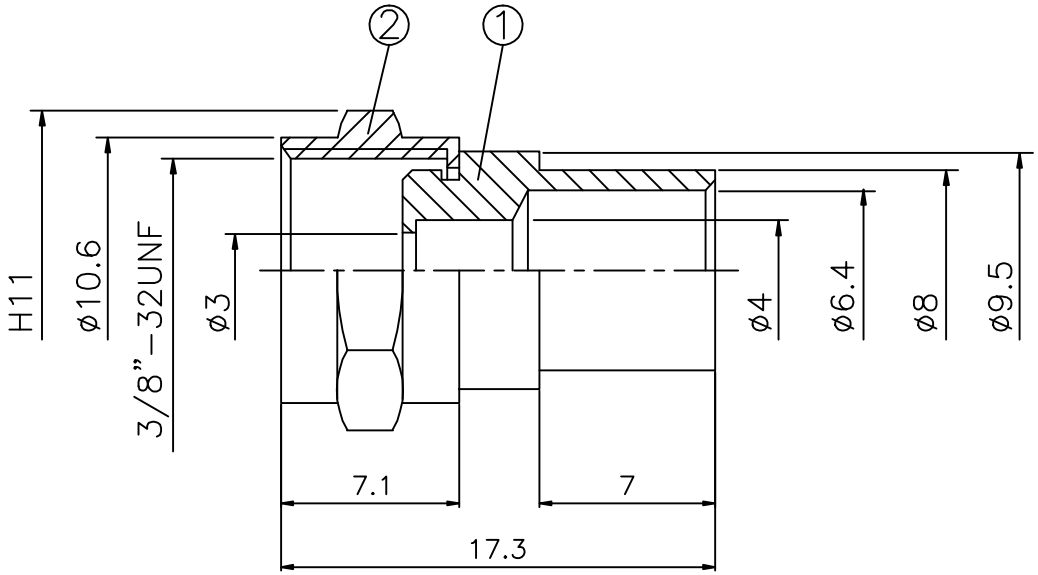

HUS-TSAN GROUP CO., LTD.	DRAWN MARY	DATE 81.08.19	DIMENSIONS ARE IN MILLMETERS	REVISION	
P.O.BOX 40-76.TAINAN.TAIWAN,R.O.C.	CHECKED	DATE	UNLESS OTHERWISE SPECIFIED TOLERANCE	DESCRIPTION	ENGINEER
TITLE MALE FOR MOULDING USE RG59U, 62A/U	Q.A.	DATE	0.5-5=±0.2 120-315=±1		
PART NO. F-08G-NICKEL	APPROVAL	DATE	5-30=±0.4 315-1000=±1.6		
DRAWING NO. F 08G NICKEL	REVISION	DATE	30-120=±0.6 1000-2000=±2.4		
			SCALE 5:1 SIZE A		