EC381CR-XXP

PCB Terminal blocks > PCB Connector-Socket

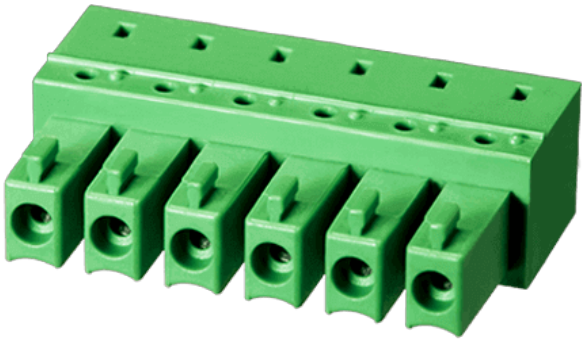

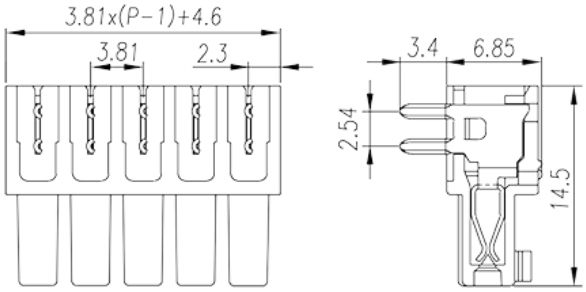

Product Description

Pitch: 3.81 mm , 300V, 8A

General information

Short description	PCB connector socket , Wave soldering
Soldering method	Wave soldering
Type of locking	Without
Pitch mm	3.81
Level	Single level
Pin demensions (Thickness x Width) mm	0.6X1.1
PCB hole diameter mm	1.2

Material information

Insulation material	PA66
Flame retardant rating , compliant with UL94	V0
Color	Green
Conductor material	Copper Alloy
Plating of conductor surface	Tinned

Connection data-UL

Rated voltage V (UL/CUL standard group B)	300

TEL: +886-2-8069-9000 / E-mail: serve@dinkle.com.tw
© DINKLE ENTERPRISE CO ,LTD. ALL RIGHT RESERVED

Rated current A (UL/CUL standard group B)	8

Connection data-IEC

Rated data	IEC 61984
Surge voltage category	Ⅲ
Pollution degree	2
Insulating material group	Ⅰ
Rated current A	14
Rated voltage V	320
Rated voltage V (II/2)	630
Rated voltage V (III/2)	320
Rated voltage V (III/3)	250
Rated impulse voltage KV (II/2)	4
Rated impulse voltage KV (III/2)	4
Rated impulse voltage KV (III/3)	4

Environment & Safety

Finger protection (YES or NO)	YES
Operating temperature. max °C	115
Operating temperature. min °C	-40

Drawings

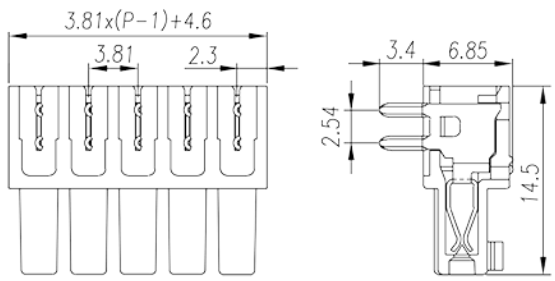

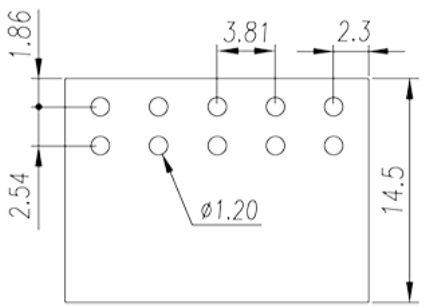

Approvals

© DINKLE ENTERPRISE CO ,LTD. ALL RIGHT RESERVED

© DINKLE ENTERPRISE CO ,LTD. ALL RIGHT RESERVED