D1RFRD006

REVISION RECORD				
REV	ECN	DESCRIPTION	DRFT	DATE

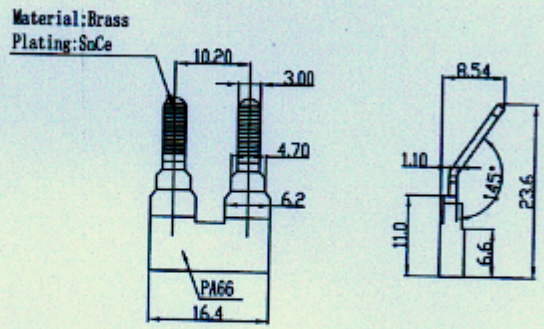

P=2(外购)

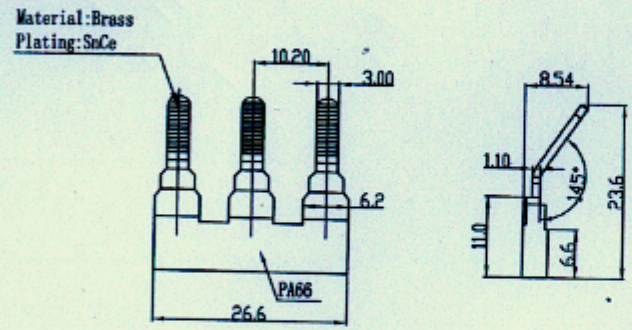

P=3(外购)

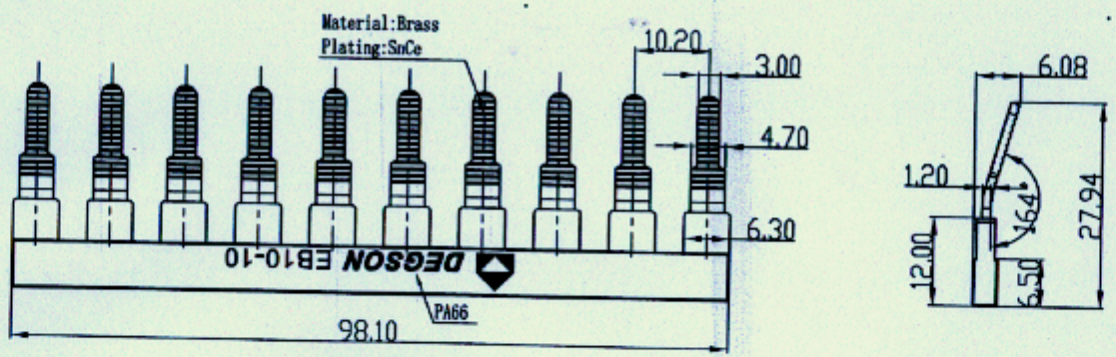

P=10(自制)

Notes:

1. Undimensioned Tolerances:

Pitch range in mm			Nominal dimension range in mm					—
to 6	over 6 to 10	over 10 to 24	to 30	over 30 to 60	over 60 to 100	over 100 to 150	over 150	⌒ ▱
±0.10	±0.15	±0.25	±0.2	±0.3	±0.5	±0.7	±1.0	0.05/10

ITEM	NAME OF PART	NO. OF PART	Q'TY	MATERIAL	NOTES
1	EB10-10-Wrap Housing	6006L0YXXA(H)	1	PA66	UL94V-0

DETACHED LISTS

MM / INCHES

TOLERANCES EXCEPT AS NOTED

MM: .0 ± ; .00 ± ; .000 ± ; ANGLES ± 1°

THIRD ANGLE PROJECTION

DFTD YHG DATE 03/04/09
CHKD AMY DATE
MFD DATE
APPVL Hang DATE 09/30/09

MATERIAL :
G.E :
FINISH
SCALE : 1:1

DEGSON ® 宁波高正电子有限公司 DEGSON ELECTRONICS CO., LTD

NAME XX=2, 3, 10
EBXX-10-1Y-00A(H)

DRAWING NO. EBXX-10-E01
/PART NO.

SIZE A3 REV T0 09/30/09

DO NOT SCALE DRAWING

SHEET 1 OF 1

宁波高正电子 发行章 2009.9.30 文管中心

1

8 7 6 5 4 3 2 1

H G F E D C B A