Dept / Qty	
DC	1
ED	1
IE	1
ISO	1
PD	1
R&D	1
SD	1
QA	1
QC	1
QE	1

REV.	DESCRIPTION	DRAWN	CHECKED	APPROVED
A	NEW RELEASE	JLZ 03/21/19'		

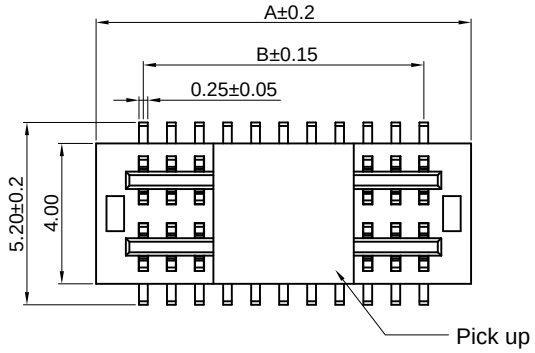

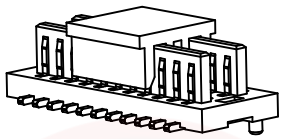

3D VIEW

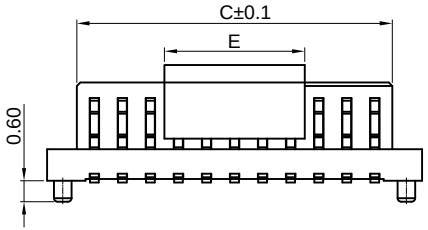

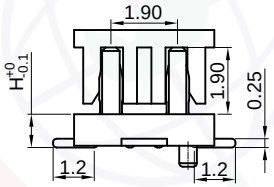

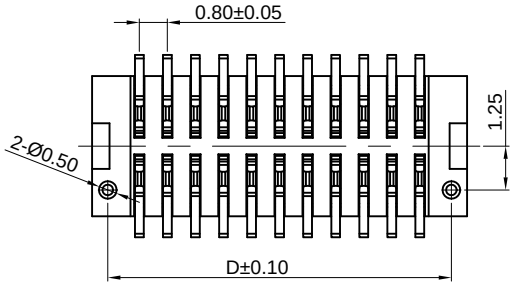

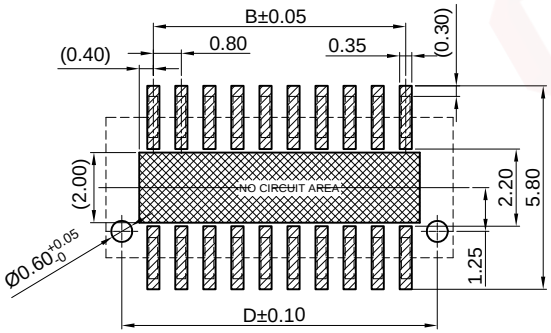

RECOMMEND PCB LAYOUT
(TOLERANCE=±0.05)

NO.of contacts	Dimensions A.	B.	C.	D.	E.	NO.of contacts	Dimensions A.	B.	C.	D.	E.
4	3.50	0.80	1.80	2.60	4.00	54	23.50	20.80	21.80	22.60	8.00
6	4.30	1.60	2.60	3.40		56	24.30	21.60	22.60	23.40	
8	5.10	2.40	3.40	4.20		58	25.10	22.40	23.40	24.20	
10	5.90	3.20	4.20	5.00		60	25.90	23.20	24.20	25.00	
12	6.70	4.00	5.00	5.80		62	26.70	24.00	25.00	25.80	
14	7.50	4.80	5.80	6.60		64	27.50	24.80	25.80	26.60	
16	8.30	5.60	6.60	7.40	8.00	66	28.30	25.60	26.60	27.40	
18	9.10	6.40	7.40	8.20		68	29.10	26.40	27.40	28.20	
20	9.90	7.20	8.20	9.00		70	29.90	27.20	28.20	29.00	
22	10.70	8.00	9.00	9.80		72	30.70	28.00	29.00	29.80	
24	11.50	8.80	9.80	10.60		74	31.50	28.80	29.80	30.60	
26	12.30	9.60	10.60	11.40		76	32.30	29.60	30.60	31.40	
28	13.10	10.40	11.40	12.20		78	33.10	30.40	31.40	32.20	
30	13.90	11.20	12.20	13.00		80	33.90	31.20	32.20	33.00	
32	14.70	12.00	13.00	13.80		82	34.70	32.00	33.00	33.80	
34	15.50	12.80	13.80	14.60		84	35.50	32.80	33.80	34.60	
36	16.30	13.60	14.60	15.40		86	36.30	33.60	34.60	35.40	
38	17.10	14.40	15.40	16.20		88	37.10	34.40	35.40	36.20	
40	17.90	15.20	16.20	17.00		90	37.90	35.20	36.20	37.00	
42	18.70	16.00	17.00	17.80		92	38.70	36.00	37.00	37.80	
44	19.50	16.80	17.80	18.60		94	39.50	36.80	37.80	38.60	
46	20.30	17.60	18.60	19.40		96	40.30	37.60	38.60	39.40	
48	21.10	18.40	19.40	20.20		98	41.10	38.40	39.40	40.20	
50	21.90	19.20	20.20	21.00		100	41.90	39.20	40.20	41.00	
52	22.70	20.00	21.00	21.80							

Notes:

Specifications:

1. Contact Resistance: 80mΩ Max.
2. Insulation Resistance: 1000MΩ Min.
3. Dielectric Withstanding Voltage: 150V AC(rms) For 1 Minute.
4. Current Rating:0.5A/Pin.
5. Voltage Rating:48V AC rms.
6. Temperature: -40°C~+85°C.

Materials:

1. Contact Material: Copper Alloy.
2. Contact Plating: Gold Plating Over Nickel.
3. Insulator Material: PA9T,Black,UL94-V0.

Product Number Code:

DS1151-07 – X X X X X X X X

- Profile Height(Dim.H)
  10:1.0mm
  20:2.0mm
- Packing Type
  R:Tape On Reel
- Pick up Support
  S:W/ Pick up
- Housing Color
  B:Black
- Contact Plating
  8:Full Gold Flash
- Mounting Type
  S:SMT Type
- Connector Type
  P:Plug
- No.of Contacts
  04~100

GENERAL TOLERANCE		ANGLE TOLERANCE	
X.	±0.60	X.	±5°
.X	±0.38	.X	±3°
.XX	±0.25	.XX	±2°

DRAWING TYPE	CUSTOMER		
SCALE	1:1	SHEET	1 OF 1
DRAWING NO.	C-DS1151-07-XXXXXXXX-A		

PROJECTION		TITLE	0.80mm Board to Board SMT Double Groove Male Type
UNITS	mm		
SHEET SIZE	A4	SERIES	DS1151-07 SERIES

晨翔电子有限公司
CONNFLY ELECTRONIC CO. LTD

The information provided herein is from CONNFLY Electronic Co., Ltd. and is confidential. Any disclosure to a party other than the recipient is prohibited. The intellectual properties and its rights contained herein, including but not limited to, trademarks, patents, copyrights, trade secrets, and technical know-how, are owned exclusively by CONNFLY or its affiliates. Unauthorized use or modification is strictly prohibited without prior written consent from CONNFLY. All intellectual properties provided herein are for reference purposes only and does not constitute authorization of its use in any format or manner. CONNFLY may enforce its intellectual property rights at its own discretion; failures or delays to exercise such rights does not constitute a waiver of such rights.