REV.	DESCRIPTION	DRAWN	CHECKED	APPROVED
A	NEW RELEASE	LJC 06/01/11'		

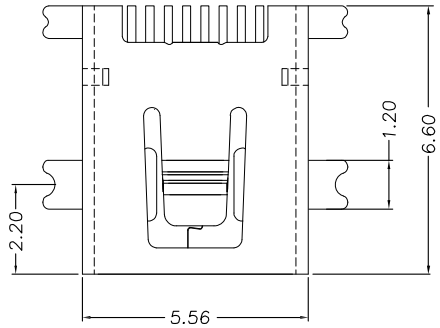

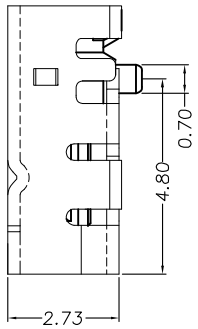

NOTES:

1.SPECIFICATIONS
- .CURRENT RATING: 0.5A/pin Max.
- .VOLTAGE RATING: 30V(DC)
- .DIELECTRIC WITHSTANDING VOLTAGE: 100VAC 1 minute.
- .CONTACT RESISTANCE: 50mΩ Max.
- .INSULATION RESISTANCE: 100MΩ Min.
- .TEMPERATURE RANGE: -40°C-+105°C

2.MATERIALS
- .HOUSING: High temperature plastic,UL94 V-0,Color of black.
- .SHELL: Copper alloy.
- .CONTACT: Copper alloy.

3.PRODUCT NUMBER CODE:

DS1104-04 - X X X - ELCH - 004

- Contact plating
  0: Selective gold flash
- Shell plating
  N: Full Nickel
- Color of housing
  B: BLACK

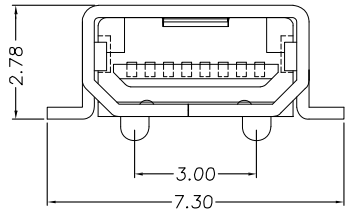

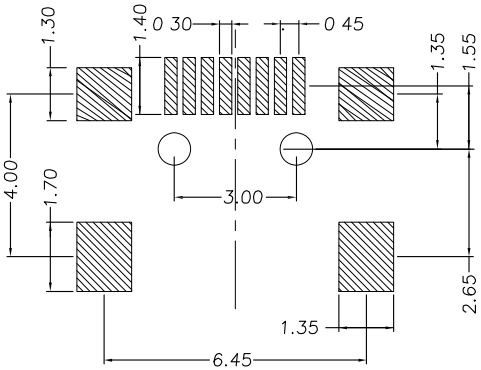

Recommend PCB Layout
Tolerance=±0.03

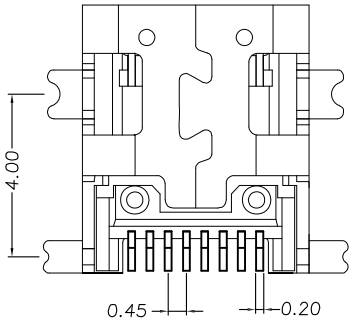

GENERAL TOLERANCE		ANGLE TOLERANCE	
X.	±0.60	X.	±5°
.X	±0.38	.X	±3°
.XX	±0.25	.XX	±2°

DRAWING TYPE	CUSTOMER		
SCALE	1:1	SHEET	1 OF 1
DRAWING NO.	C-DS1104-04-XXX-ELCH-004		

PROJECTION		TITLE	MINI USB 8 Positions FEMALE SMT TYPE
UNITS	mm		
SHEET SIZE	A4	SERIES	DS1104-04 SERIES

晨翔电子有限公司
CONNFLY ELECTRONIC CO. LTD