REV.	DESCRIPTION	DRAWN	CHECKED	APPROVED
A	NEW RELEASE	YCH 01/24/08'	~	

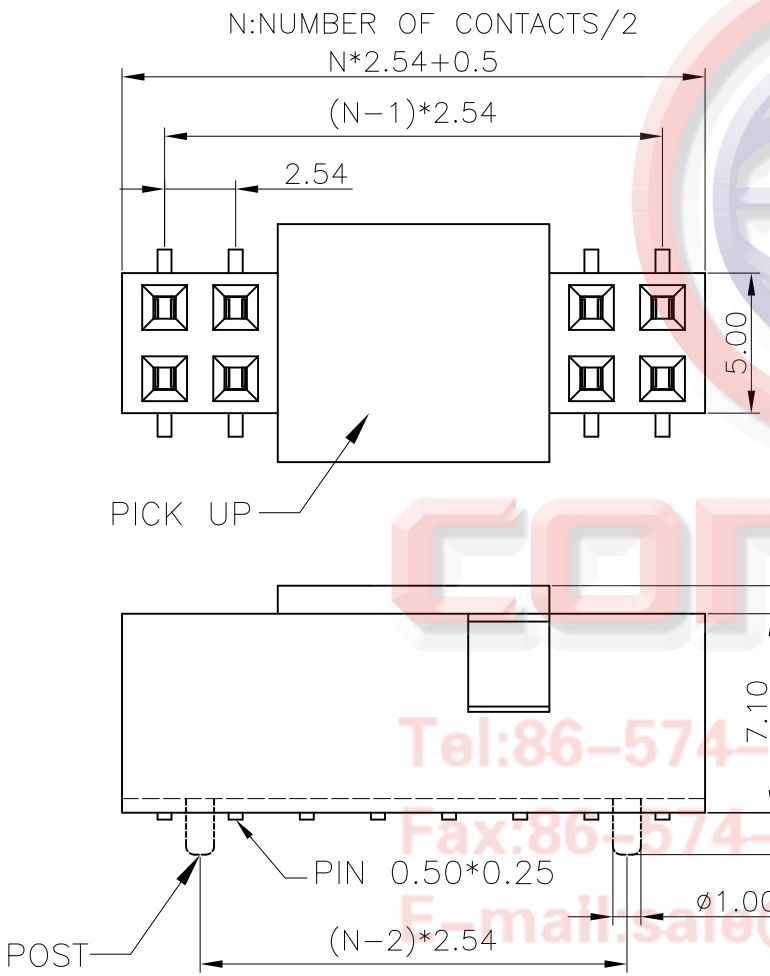

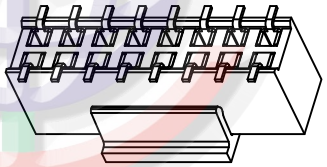

3D MODEL
Scale 1:2

NOTES:

1. MATERIAL
   1.1 INSULATOR MATERIAL:THERMOPLASTIC(UL 94V−0).
   1.2 CONTACT MATERIAL:COPPER ALLOY.
2. SPECIFICATION
   2.1 TEMPERATUER: −40°C~+105°C.
   2.1 DIELECTRIC WITHSTANDING VOLTAGE:AC 500V AC.
   2.2 INSULATION RESISTANCE:1000MΩ min.
   2.3 CONTACT RESISTANCE:20mΩ max.
   2.4 CURRENT RATING:3A.
3. PART NUMBER: DS1023−11
4. PRODUCT NUMBER CODE:

DS1023−11 − X X X X X X

- POST SUPPORT
  S:W/ POST
  X:W/O POST
- PACKING TYPE
  T:TRAY
  R:TAPE ON REEL
  B:TUBE
- PICK UP SUPPORT
  S: W/
  X: W/O
- CONTACT PLATING
  8: FULL GLOD FLASH
  0: SELECTIVE GLOD FLASH
- HOUSING COLOR
  B: BLACK
- No.of Contacts
  2*2 − 2*40

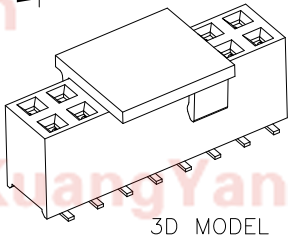

3D MODEL
Scale 1:2

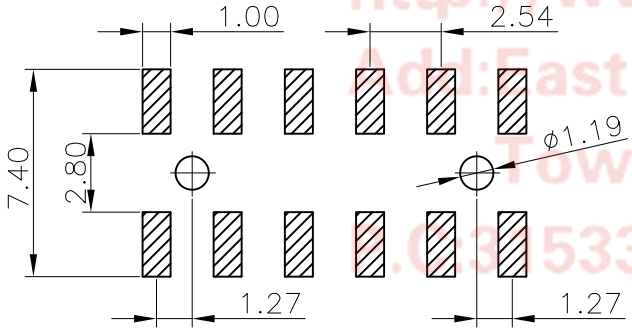

RECOMMEND PCB LAYOUT
(TOLERANCE=±0.05)

GENERAL TOLERANCE		ANGLE TOLERANCE	
X.	±0.60	X.	±5°
.X	±0.38	.X	±3°
.XX	±0.25	.XX	±2°

DRAWING TYPE	CUSTOMER		
SCALE	1:1	SHEET	1 OF 1
DRAWING NO.	C−DS1023−11−XXXX		

PROJECTION	⊕ −⊏	TITLE	FEMALE HEADER PITCH 2.54mm SMT TYPE H=7.1mm
UNITS	mm		
SHEET SIZE	A4	SERIES	DS1023−11 SERIES

晨翔电子有限公司
CONNFLY CONNFLY ELECTRONIC CO. LTD

CONNFLY
Tel:86−574−63508787
Fax:86−574−63510817
E-mail:sale@connfly.com
http://www.connfly.com
Add:East Industry Zone KuangYan
Town Cixi Ningbo China
P.C.315333