REV.	DESCRIPTION	DRAWN	CHECKED	APPROVED
A	NEW RELEASE	LL 06/30/06'		

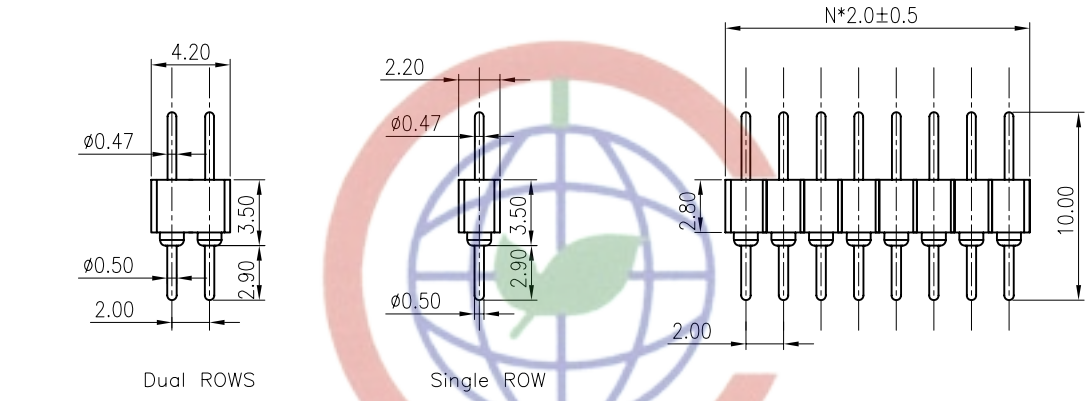

V/T TYPE

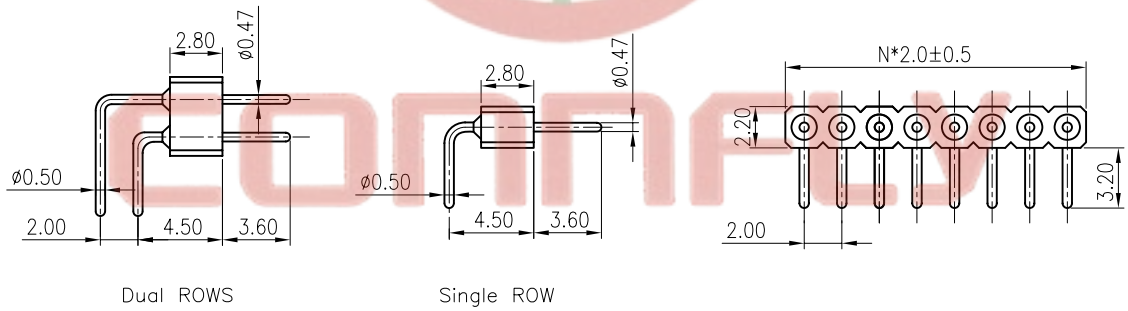

R/A TYPE

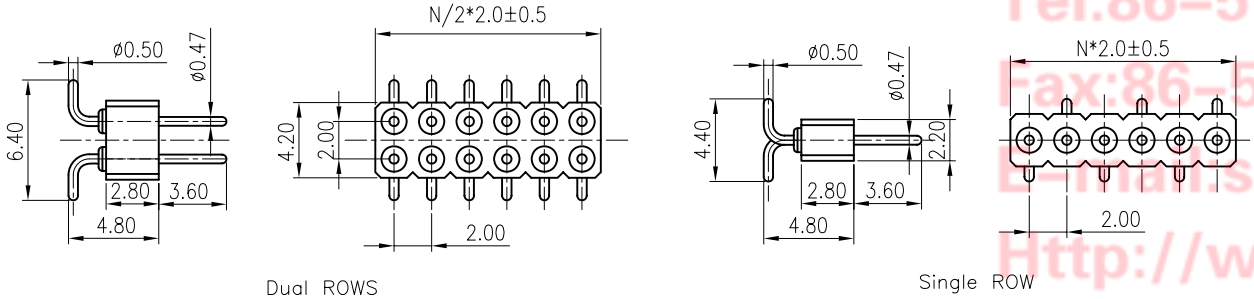

SMT TYPE

NOTES:

1. ELECTRICAL CHARACTERISTICS:
   - 1.1 CONTACT RESISTANCE: 20mΩ Max.
   - 1.2 DIELECTRIC WITHSTANDING VOLTAGE: 500V AC(rms) FOR 1 MINUTE.
   - 1.3 INSULATION RESISTANCE: 1000MΩ Min.
2. ENVIRONMENT CHARACTERISTICS:
   - 2.1 TEMPERATURE: −40°C~+105°C.
3. PRODUCT NUMBER CODE:

DS1004-01 – X X X X

- Housing color
  - B: Black
- Contact plating
  - 1: Tin 150u''
  - 2: Tin 200u''
  - 3: G/F
  - 4: Gold 3u''
  - 5: Gold 10u''
  - 6: Gold 15u''
- Mounting type:
  - V: V/T TYPE
  - R: R/A TYPE
  - S: SMT TYPE
- No.OF CONTACTS
  - 1*1 – 1*40
  - 2*1 – 2*40
- SERIES No.
  - DS1004-01

Tel:86-574-63508787
Fax:86-574-63510817
E-mail:sale@zhenqin.com.cn
Http://www.connfly.com
Add:East Industry Zone KuangYan Town Cixi Ningbo China
Post:315300

GENERAL TOLERANCE		ANGLE TOLERANCE	
X.	±0.60	X.	±5°
.X	±0.38	.X	±3°
.XX	±0.25	.XX	±2°

DRAWING TYPE	CUSTOMER		
SCALE	1:1	SHEET	10F1
DRAWING NO.	C-DS1004-01-XXXX		

PROJECTION		TITLE	DIP & SMT STRIPS ADAPTOR PITCH 2.00mm
UNITS	mm		
SHEET SIZE	A4	SERIES	DS1004-01 SERIES

晨翔电子有限公司
CONNFLY CONNFLY ELECTRONIC CO. LTD