MXG SERIES LED DRIVERS

DL-75W-MTG SPEC V1.2

Features

- Class I structure
- Input voltage: 120-277 V ~ 50/60 Hz
- Efficiency :89.5%(Typ.)
- Constant power drive and constant current output control mode
- Metal shell structure, protection grade: IP65
- Lightning protection level: differential mode 6kV, common mode 10kV
- When dimming is off , standby power consumption is less than or equal to 0.5W.(X version only)
- Function selection:

Output current is adjusted by external potentiometer (S/X version)

Isolated 3 in 1 dimming (S/X version)

12V/300mA auxiliary power supply (X version only)

•Lifetime design： 5 years

Applications

Road lighting、Industrial lighting、Venue lighting

Floodlight lighting、Landscape lighting 、Plant lighting

Model list

Model NO.	Input voltage	Output power	Output voltage	The default current	Eff.	T.H.D	PF
DL-75W-V48S-MXG DL-75W-V48X-MXG	120-277V 50/60Hz	75W	25-48Vdc	2.1A	≥89.5%	≤10%	≥0.95

Note :

1. Test conditions of the above parameters: Ta=25℃, 230Vac input, full load operation for 30 minutes;
2. When the input is less than 108Vac,the output power gradually decreases.When the input 120-277VAC,rated power 75W. Please refer to “THE OUTPUT POWER VS INPUT VOLTAGE” curve chart for details.

Input characteristics

Parameter	Min	Typ.	Max	Note
Rated input voltage	120Vac	230Vac	277Vac	
Input voltage range	108Vac		305Vac	
Rated frequency	47Hz	50/60Hz	63Hz	
Power factor	-	0.95	-	@230Vac full load
Power factor	0.88	-	-	@277Vac 65% load
T.H.D.	-	-	10%	@230Vac full load
T.H.D.	-	-	20%	@277Vac 65% load
Input current	-	-	0.75A	@120Vac full load
Inrush current	-	-	70A	230Vac, cold start (25℃)

Output characteristic

Parameter	Min	Typ.	Max	Note
Rated current DL-75W-V48S/X-MTG	-	1.56A	-	
Output current range DL-75W-V48S/X-MTG	1.0A	-	2.1A	
Output voltage range DL-75W-V48S/X-MTG	25V	-	48V	
Rated power(90-120Vac)	-	37.5W	75W	The derating begins when the input voltage is less than 108Vac
Rated power(120-277Vac)	-	75W	-	
No-load voltage DL-75W-V48S/X-MTG	-	-	60V	
Efficiency@120Vac DL-75W-V48S/X-MTG	87.5%	88%	-	@120Vac full load

Output characteristic

Parameter	Min	Typ.	Max	Note
Efficiency@230Vac DL-75W-V48S/X-MTG	88.7%	89.5%	-	full load@230Vac
Ripple coefficient of total output current (Imax-Imin)/(Imax+Imin)	N/A	N/A	N/A	no requirement
Accuracy of output current	-5%	-	+5%	full load constant-power range
Line regulation	-3%	-	+3%	full load
Load regulation	-5%	-	+5%	full load
Starting time	-	-	500ms	full load@230Vac
12v output voltage	10.8 V	12V	13.2V	
12v output current	0 mA	-	300 mA	The reference place is Dim−
12V output line transient peak current @6W	-	-	500 mA	In a 5.0ms cycle, the maximum duration of the maximum peak current of 500mA is 2ms, and the average value must not exceed 250mA

Note: 1.The output current range is limited by the input and output voltage, please refer to “I-V WORKING AREA” for details.

Dimming characteristic

Dimming function		Min	Typ.	Max	Instructions
1-10V Dimming (Optional)	Safe applied voltage range	0V	-	12V	When the external voltage is ≥12V, the dimming will fail
	Dimming output range	10%	-	100%	-
	Rated dimming voltage range	1V	-	10V	-
PWM Dimming (Optional)	PWM high level	9.5V	-	10.5V	-
	PWM low level	0V	-	0.3V	-
	PWM frequency band	300Hz	-	2000Hz	-
	PWM duty cycle	10%	-	99%	Output full power at 99% duty cycle
Resistor Dimming (Optional)	External resistance value	10KΩ	-	100KΩ	-
	Dimming output range	10%	-	100%	-

Note:

1. Output current of dimming port: 100uA (typical value);
2. The maximum operation voltage for the dimming port is 12V. Wrong voltage beyond the range or a reverse connection may lead to a critical failure of the driver;
3. dimming default setting is three in one positive logic dimming;
4. When the function is set as positive logic dimming, 0V dimming can be realized for applications within the range of constant power load voltage, but 1-10V dimming is recommended for customers.

Protection

Function	Function instructions
Input under-voltage protection	When the input voltage is less than 108Vac, the output power gradually decreases.
Output overload protection	Protection mode:hiccup mode,recovers automatically after fault condition is removed.
Output short circuit protection	Hiccup mode:recovers automatically after fault condition is removed
Over temperature protection	Self-recovery type：when the housing temperature is greater than 90℃, the output power decreases gradually.
Output over-voltage protection	Protection mode: Hiccup mode or clamped in output highest voltage , the product is not damaged，LED driver works normally after fault condition is removed.

Note:

1. Unless otherwise specified, all specifications and parameters shall be measured at the conditions of 230Vac (50Hz), rated load and 25℃ of ambient temperature;
2. Including setting error, line regualtion and load regualtion.

Environmental

Environmental categories	Parameter
Working temperature	-40 ~ +55℃@200-277Vac, -40 ~ +45℃ @120-200Vac (refer to "Life Curve ")
Working humidity	20 ~ 95% RH, non condensing
Storage temperature、humidity	-40~+80℃, 10 ~ 95% RH
Resistant to vibration	10 ~ 500Hz, 5G 12 min/cycle, X, Y, Z axis 72 min each
MTBF	230Khrs min. MIL-HDBK-217F (Ta=25℃)
The life time	75000 hours, 230Vac, 80% load, shell temperature 75℃, see life curve for details

Safety and EMC

Safety categories	Standard
Safety	EN61347-1、EN61347-2-13、IEC61347-1、IEC61347-2-13、AS/NZS61347.1、AS61347.2.13、EN 62384、UL8750、FCC Part 15 Subpart B
EMC	EN 55015、EN 61000-3-2 、EN 61000-3-3
Surge protection	Differential mode L-N ±6KV（2 ohm）,common mode L，N-PE± 10 KV (12 ohm)；Refer to IEC61000-4-5 2014 Criterion B
High-pot test	I/P-O/P:3.75KVac I/P-PE :1.5KVac O/P-PE : 0.5KVac I/P-DIM:3.75KVac O/P-DIM:1.5KVac
Insulation impedance	I/P-PE:100MΩ / 500VDC; I/P-O/P:100MΩ / 500VDC / 25℃/ 70% RH
Leakage current	<0.7mA@277Vac

Note:

1.The driver is considered as a component that will be operated in combination with the final equipment. Since EMC performance will be affected by the complete installation,the final equipment manufacturers must re-qualify EMC Directive on the complete installation again.

I-V Working area

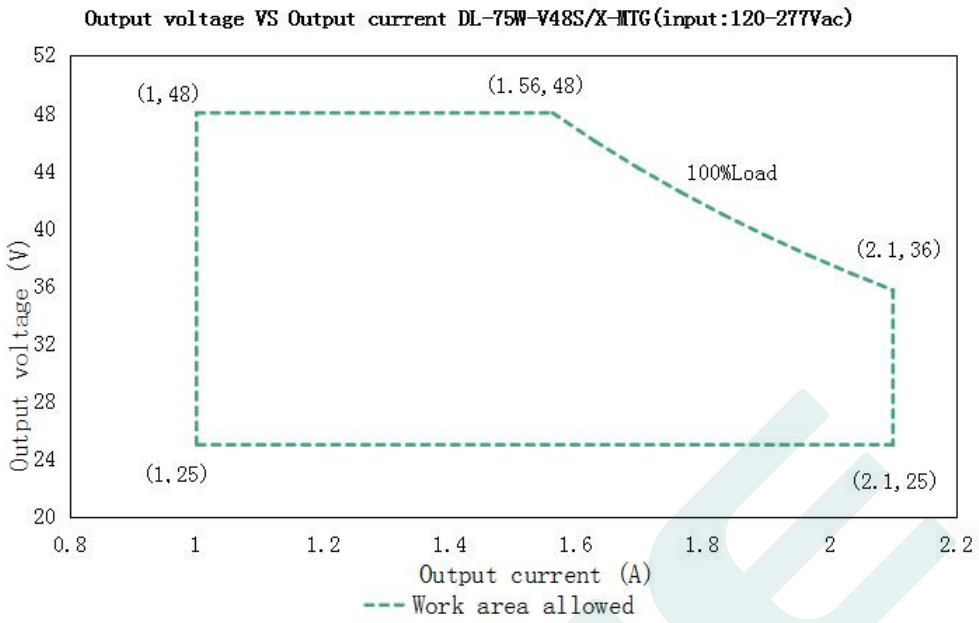

Load	Output								
Load working Voltage	25V	27V	30V	33V	36V	39V	42V	45V	48V
Io_MAX	2.1A	2.1A	2.1A	2.1A	2.1A	1.79A	2.14A	1.67A	1.56A
Po_MAX	52.5W	56.7W	63W	69.3W	75W	75W	75W	75W	75W

Eff. VS Output voltage(DL-75W-V48S/X-MTG)

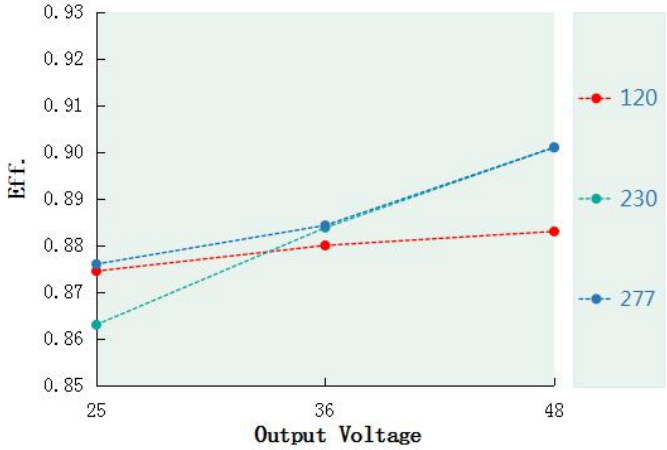

Power factor VS Input voltage(DL-75W-V48S/X-MTG)

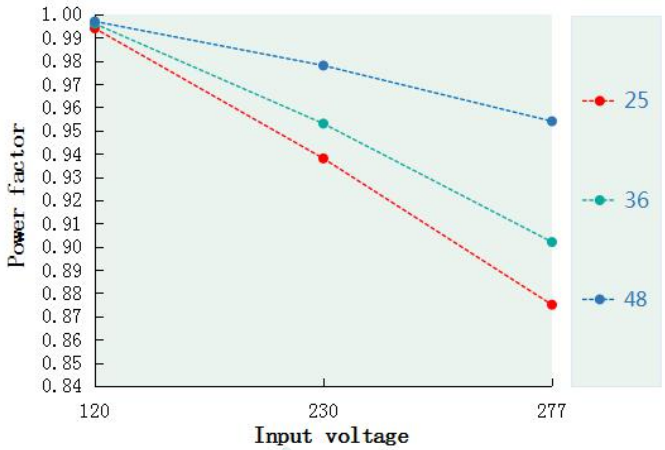

T.H.D. VS Output voltage(DL-75W-V48S/X-MTG)

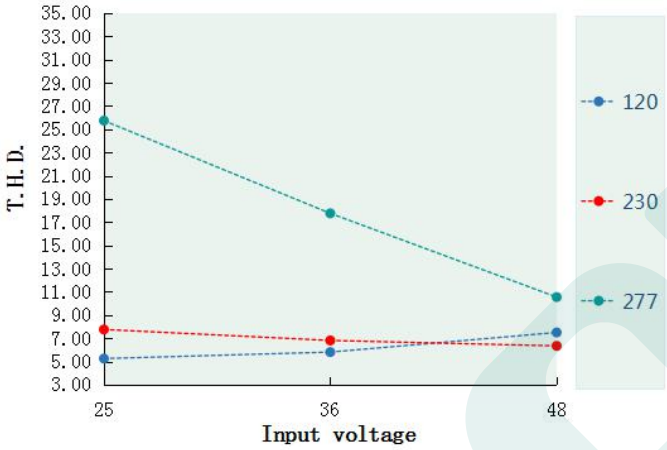

Output power VS Tcase (DL-75W-V48S/X-MTG)

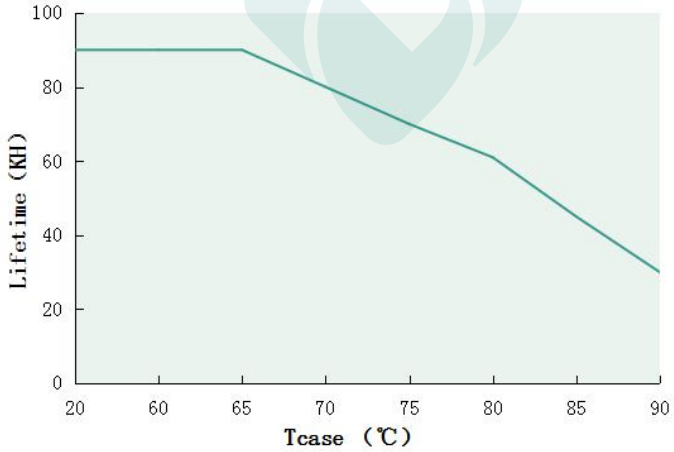

Tcase VS Lifetime(DL-75W-V48S/X-MTG)

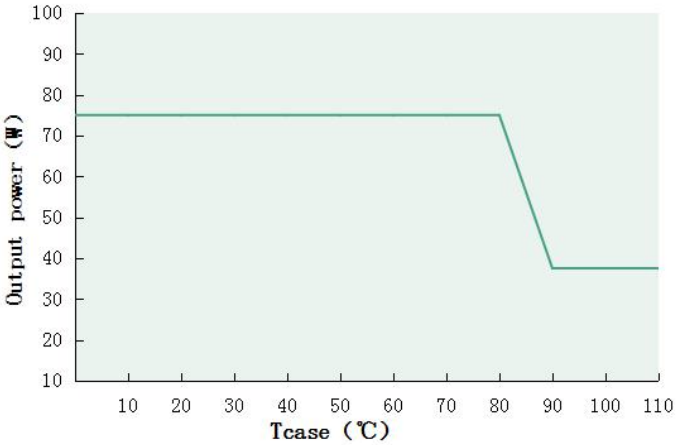

Inrush Current(DL-75W-V48S/X-MTG)

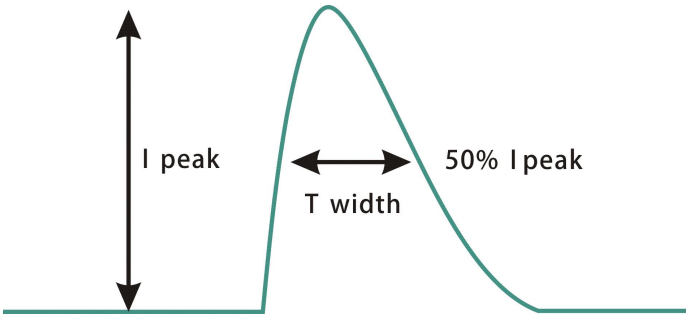

Input voltage	Peak current	T(@50% Peak current)
120Vac	20.5A	20us
230Vac	39.2A	20us
277Vac	47.2A	20us

Output power VS Input voltage

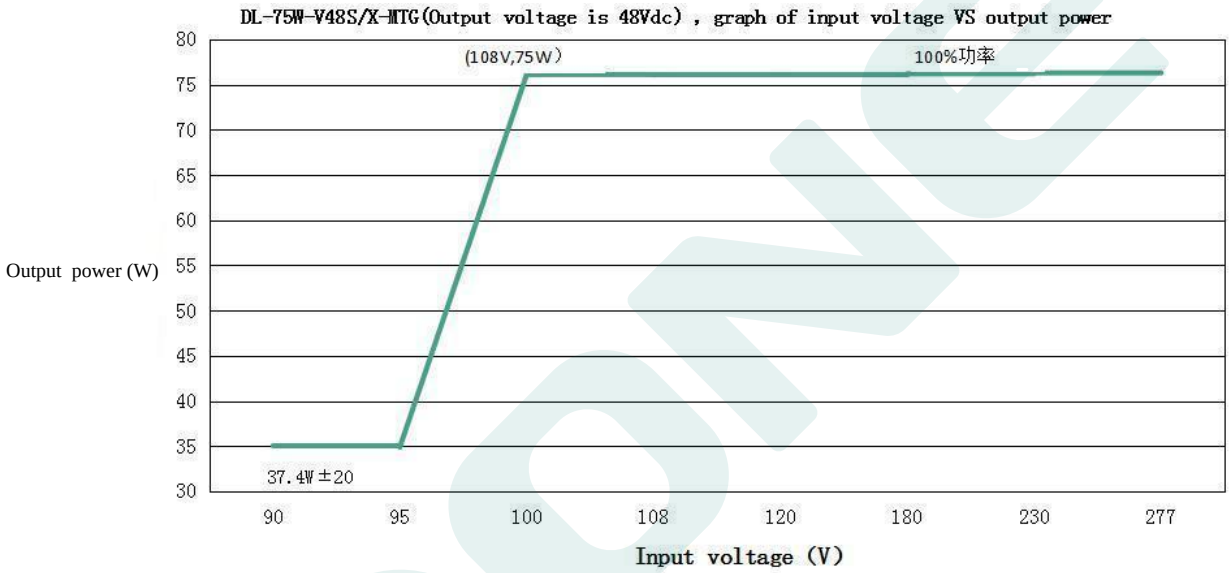

DL-75W-V48S/X-MTG (When the output voltage is48Vdc, the rated output current value and output power corresponding to different input voltage)								
Input Voltage	90Vac	95Vac	100Vac	108Vac	120Vac	180Vac	230Vac	277Vac
Iout	0.73A	0.73A	1.58A	1.58A	1.58A	1.58A	1.59A	1.59A
Pout	36.96W	36.98W	76.1W	76.52W	76.2W	76.3W	76.3W	76.3W

Note:

1.Input voltage will fluctuate,resistance error and other factors.At the decrease or increase of power (Vin=108Vac),it will move left and right,with the range of 108V .

2.When the input voltage is 90-108Vac,the output power range is 75W±20%.

Dimming operation

※ Three-in-one dimming function (X/S version only)

A. connect a resistor 10-100K or 1-10V DC voltage or 10V PWM signal between DIM+ and DIM- to adjust the output current.

B. output current of dimming port: 100uA (typical value).

◎ With an applied voltage of 1-10V:

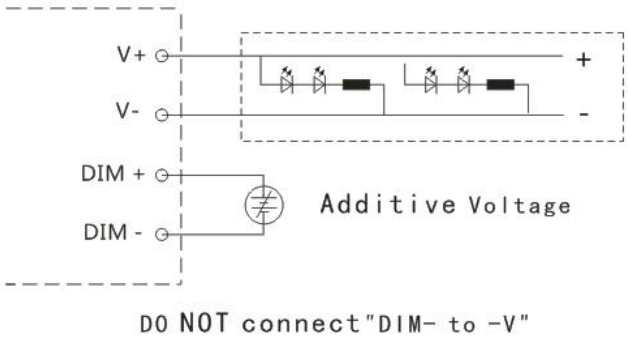

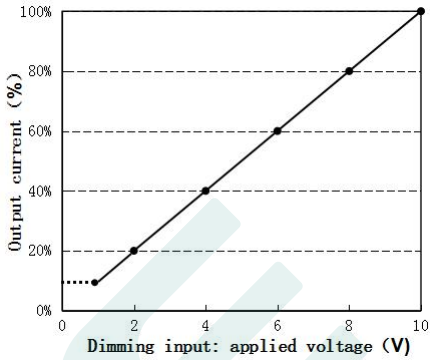

◎ Applying additive 10V PWM signal（Frequency range：300Hz-2K Hz）：

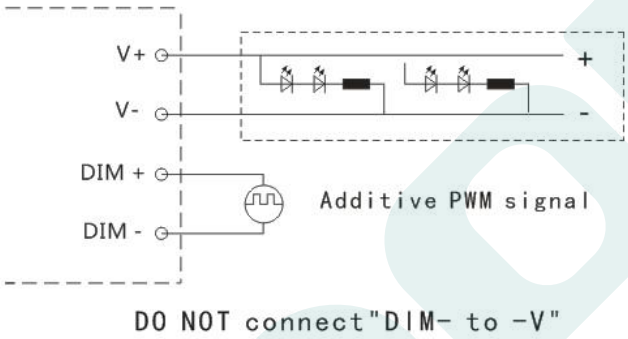

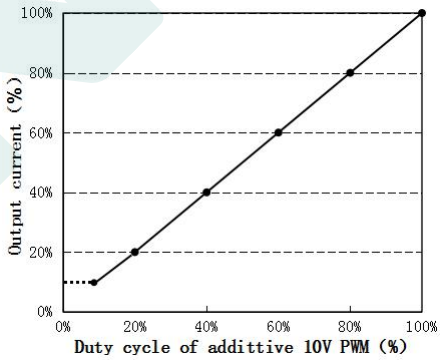

◎ With an additional 10-100K resistor:

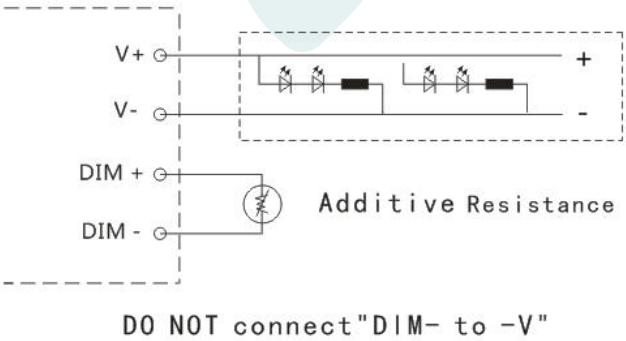

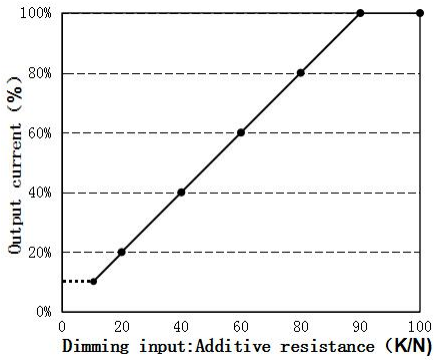

Remark:

When Dimming input is 0V in the constant-power range,the lamp can be dim-to-off.

Mechanical specification

Size（mm）	L175*W48*H31.5

General product dimension drawing

DL-75W-V48S-MTG

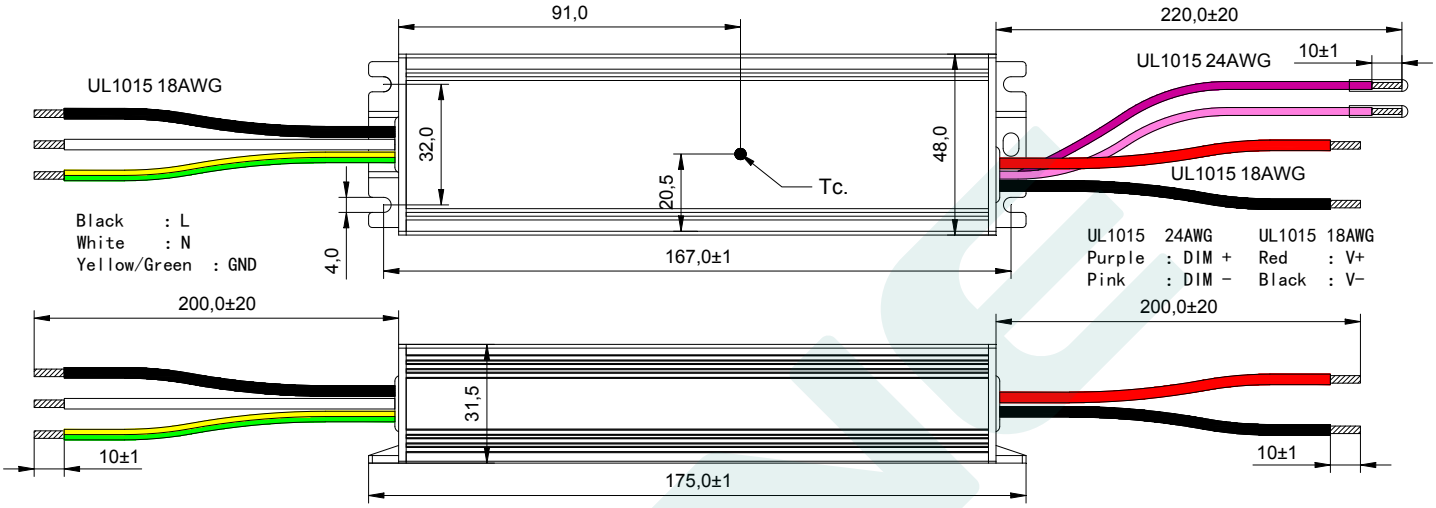

General product dimension drawing

DL-75W-V48X-MTG

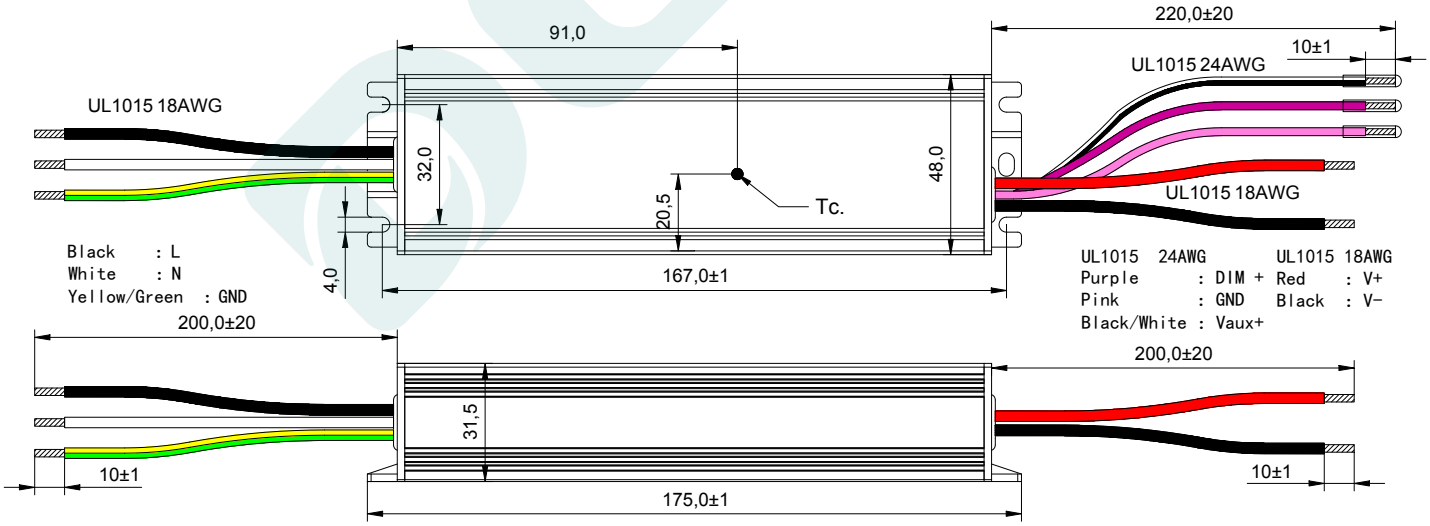

Weight

Weight	533 g

Packaging

Packaging（mm）	L475*W350*H205

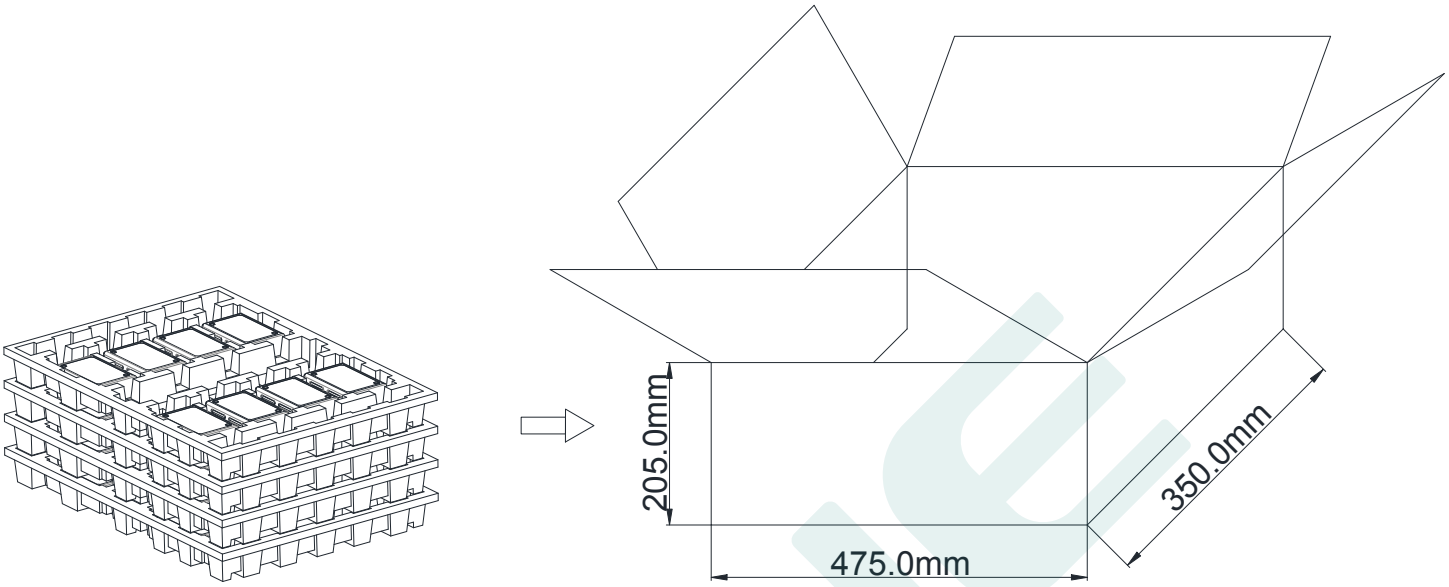

Note：One Carton 4 layers and 8 pcs each layer, total 32pcs/carton.

Note:

1. According to the certificate obtained by the LED DRIVER, the LED DRIVER with the English label is sold in Europe, America and India.
2. The LED DRIVER with Chinese label is only used for China market.

Version

DATE	DESCRIPTION	REV.	CHECK
2022.4.21	Initial version.	V1.0	
2022.06.07	1.Modify the model list on page 2, add description of THD. and power factor. 2.Modify the dimension drawing on page 11.	V1.1	
202210.25	1.Modify the description of dimming 1-10 on page 4	V1.2	2022.10.25 15:51:51 +08'00' ZHANGTINGWEI 2022.10.26 08:21:43 +08'00'

MANUFACTRUER		
EDIT	CHECK	APPROVE
LZX 2022.10.25 14:54:29 +08'00'	2022.10.25 15:10:58 +08'00'	