RXG SERIES LED DRIVERS

DL-40H-RXL_V1.0

Guangdong DONE Electronic Technology Co., Ltd

Features

- Class I structure
- Input voltage: 200-277Vac ～ 50/60Hz
- Efficiency :87%(Typ.)
- Constant power drive and constant voltage output control mode
- Metal housing structure, protection grade: IP67
- Lightning protection level: differential mode 4KV, common mode 6KV
- All-round protection: output temperature, output over-voltage, output over-current, short circuit protection
- 5 years warranty

Product introduction

DONE DL-40H-RXL is a series of constant voltage products with output power of 40W. 40H-RXG operates from 176-305Vac, and offers12、24、36、48Vdc with different mode .The also provide perfect OTP、OVP、OLP、SCP.and the product is designed with IP67 protection. The aluminum housing greatly improves the heat dissipation efficiency of the product and increases the reliability of outdoor applications. Provide reliable power supply solutions for outdoor landscape lighting, architectural lighting, and advertising signage lighting.

Model list

Model NO.	Input voltage	Output power	Output voltage	The default current	Eff. (Typ.)	T.H.D	PF
DL-40H-V12-RXL	200-277Vac 50/60Hz	40W	12Vdc	0-3.34A	≥87%	< 10%	0.95
DL40H-V24-RXL	200-277Vac 50/60Hz	40W	24Vdc	0-1.67A	≥87%	< 10%	0.95
DL-40H-V36-RXL	200-277Vac 50/60Hz	40W	36Vdc	0-1.11A	≥87%	< 10%	0.95
DL-40H-V48-RXL	200-277Vac 50/60Hz	40W	48Vdc	0-0.84A	≥87%	< 10%	0.95

Note：

1. Test conditions of the above parameters: Ta=25℃, 230Vac input, full load operation for 30 minutes;
2. Including setting error, linear adjustment rate and load adjustment rate;
3. Power supply is used as a component with terminal equipment. EMC is affected by the whole set of devices. Terminal equipment manufacturers need to re-confirm the EMC for the whole set of devices.

Input characteristics

Parameter	Min	Typ.	Max	Note
Rated input voltage	200Vac 250Vdc	230Vac	277Vac 400Vdc	N/A
Input voltage range	176Vac	-	305Vac	N/A
Rated frequency	47Hz	50/60Hz	63Hz	N/A
Power factor	-	0.95	-	100% load, 230Vac input
Power factor	-	0.90	-	60% load, 230Vac input
T.H.D.	-	-	10%	100% load, 230Vac input
T.H.D.	-	-	20%	60% load, 230Vac input
Input current	-	-	0.30A	@180Vac full load
Inrush current	-	-	70A	230Vac, cold start (25℃)
16A Circuit breaker The number of power supplies of the same model can be configured	12pcs (Type B circuit breaker) 20pcs (Type C circuit breaker) for 230Vac input			

Output characteristics

Parameter	Min	Typ.	Max	Note
Rated current DL-40H-V12-RXL DL-40H-V24-RXL DL-40H-V36-RXL DL-40H-V48-RXL	-	 3.34A 1.67A 1.11A 0.84A	-	N/A
Output current range DL-40H-V12-RXL DL-40H-V24-RXL DL-40H-V36-RXL DL-40H-V48-RXL	0	-	 3.34A 1.67A 1.11A 0.84A	N/A
Output voltage range DL-40H-V12-RXL DL-40H-V24-RXL DL-40H-V36-RXL DL-40H-V48-RXL	-	 12V 24V 36V 48V	-	N/A
Rated power(200-277Vac)	-	40W	-	N/A
No-load voltage DL-40H-V12-RXL DL-40H-V24-RXL DL-40H-V36-RXL DL-40H-V48-RXL	 - -	 - -	 12.5V 24.5V 36.7V 48.9V	N/A
Efficiency@200Vac DL-40H-V12-RXL DL-40H-V24-RXL DL-40H-V36-RXL DL-40H-V48-RXL	 85% 85% 85% 85%	 86% 86% 86% 86%	-	full load @200Vac
Efficiency@230Vac DL-40H-V12-RXL DL-40H-V24-RXL DL-40H-V36-RXL DL-40H-V48-RXL	 86% 86% 86% 86%	 87% 87% 87% 87%	-	full load @230Vac

Output characteristics

Parameter	Min	Typ.	Max	Note
Accuracy of output voltage	-3%	-	+3%	100% load
Line regulation	-3%	-	+3%	50-100% load@230Vac
Load regulation	-3%	-	+3%	50-100% load@230Vac
Starting time	-	-	500 ms	Full load@230Vac

Protection

Function	Function instructions
Output overload protection	Protection mode:hiccup mode,recovers automatically after fault condition is removed.
Output short circuit protection	Hiccup mode:recovers automatically after fault condition is removed
Over temperature protection	Self-recovery mode：when the housing temperature is greater than 90℃, the output power off.
Output over-voltage protection	Output voltage > working voltage 1.08-1.2times turn-off
Output over-current protection	Output current >1.1-1.5 times turn-off

Safety and EMC

Safety categories	Standard
Safety	EN61347-1、EN61347-2-13、IEC61347-1、IEC61347-2-13、EN 62384、EN 62493
EMC	EN 55015、EN 61000-3-2 、EN 61000-3-3、EN 61547、GB/T 17743、GB 17625.1
Surge protection	Differential mode L-N ±4KV（2 ohm）,common mode L，N-PE± 6 KV (12 ohm)；Refer to IEC61000-4-5 2014
High-pot test	I/P-O/P:3.75KVac I/P-PE :1.5KVac O/P-PE : 0.5KVac
Insulation impedance	I/P-PE:100MΩ / 500VDC; I/P-O/P:100MΩ / 500VDC / 25℃/ 70% RH
Leakage current	<0.7mA@277Vac

Environmental

Environmental categories	Parameter
Working temperature	-40 ~ +55℃@200-277Vac, (refer to "Life Curve ")
Working humidity	20 ~ 95% RH, non condensing
Storage temperature、humidity	-40 ~ +80℃, 10 ~ 95% RH
Resistant to vibration	10 ~ 500Hz, 5G 12 min/cycle, X, Y, Z axis 72 min each
MTBF	230Khrs min. MIL-HDBK-217F (Ta=25℃)
Lifetime	70,000 hours @Tcase≤75℃,230Vac, 100% Load, Please refer to "Tcase VS Lifetime" section

Inrush current

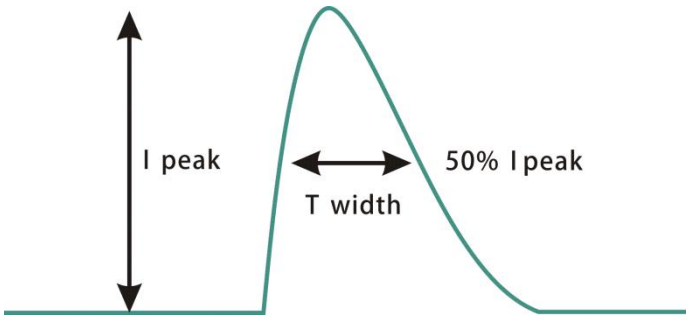

Input voltage	Peak current	T(@50% Peak current)
200Vac	46A	135us
230Vac	56.67A	128us
277Vac	67.67A	132us

DL-40H-RXL Parametric curves

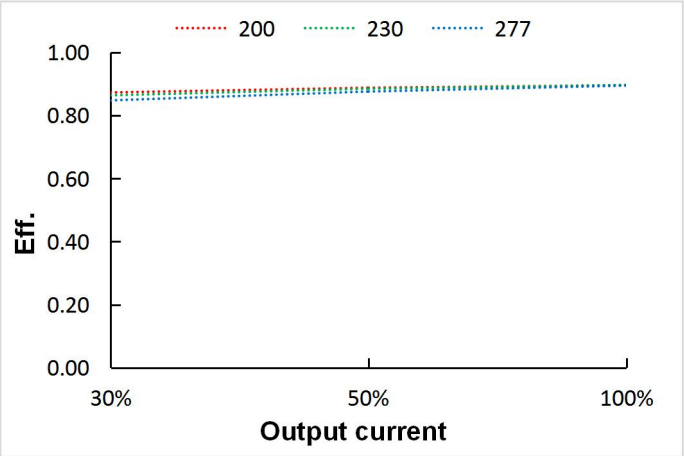

Eff. VS Output current

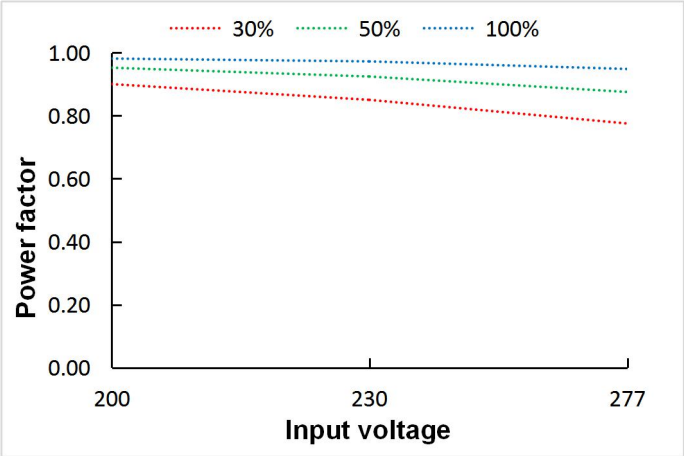

Power factor VS Input voltage

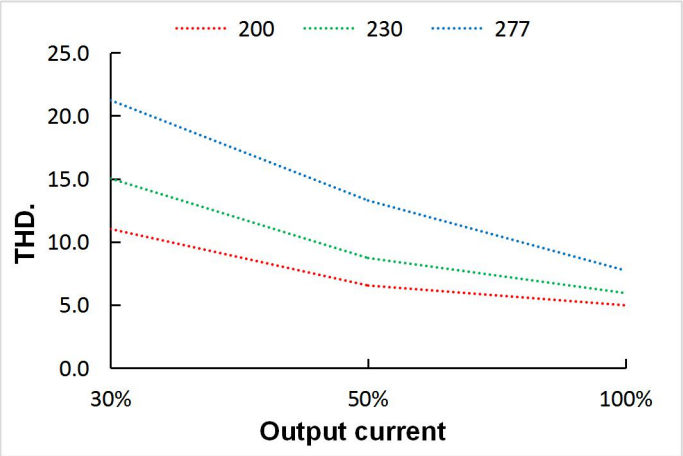

THD. VS Output current

DL-40H-RXL Parametric curves

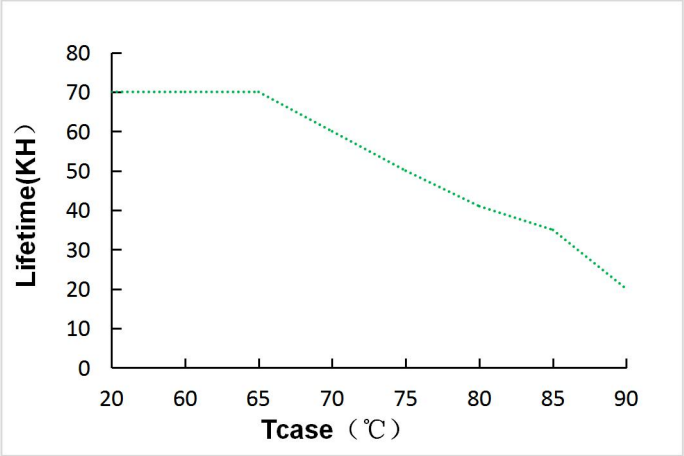

Lifetime VS Tcase

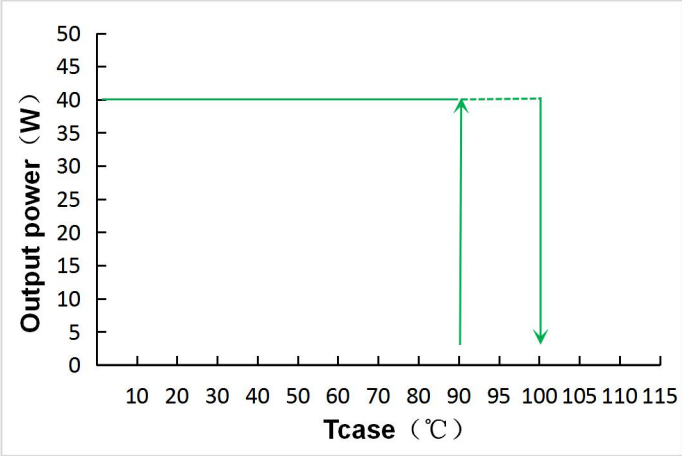

Output power VS Tcase

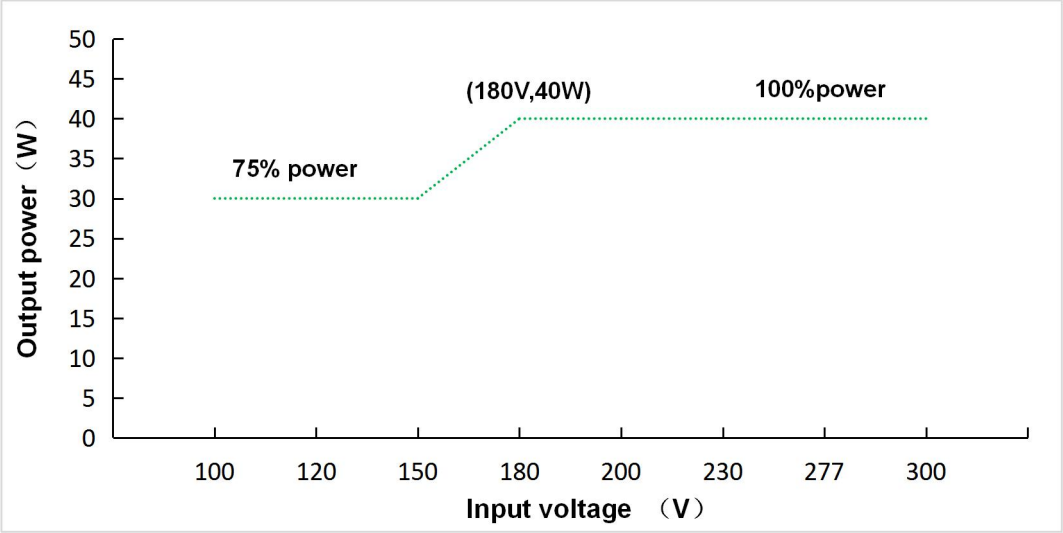

Output power VS Input voltage

Note: If the input voltage is lower than 176Vac, the output power should be derated to 75% of the load.

Mechanical specification

Size（mm）	L125mm*W40mm*H30mm	0.303 KG

DL-40H-RXL

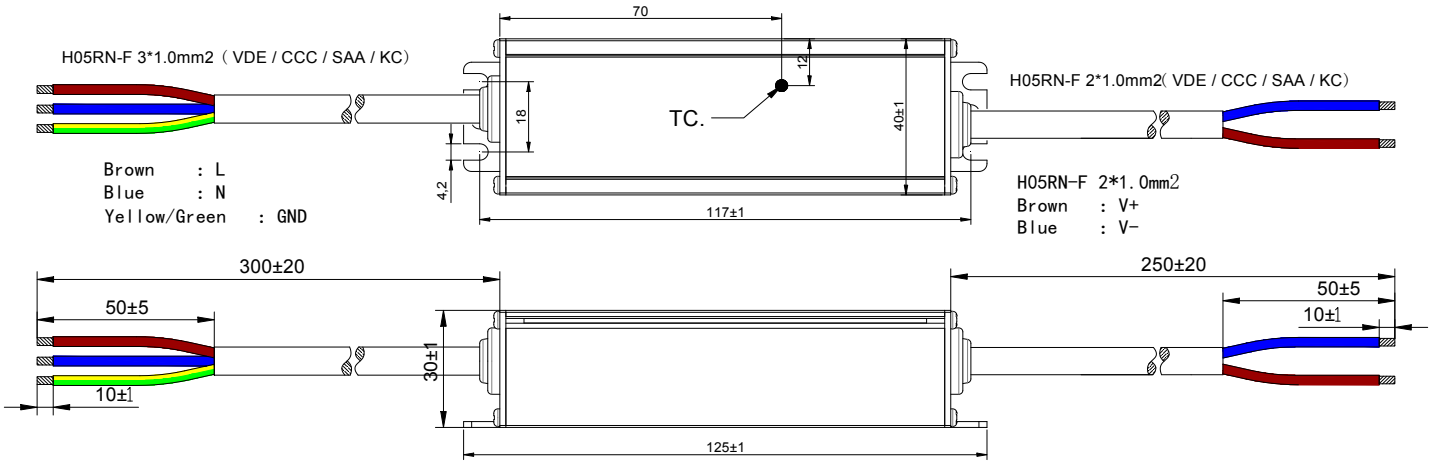

Packaging

Packaging（mm）	L475*W350*H160mm

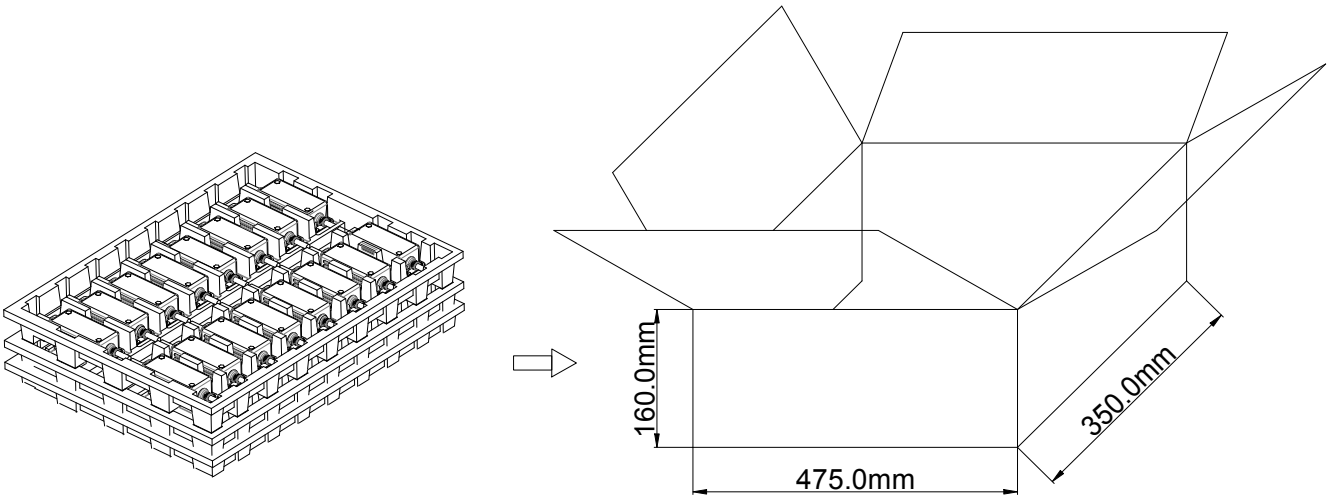

Note：One Carton 3 layers and 16 pcs each layer, total 48 pcs/carton.

Note:

1. According to the certificate obtained by the LED DRIVER, the LED DRIVER with the English label is sold in Europe, America and India.
2. The LED DRIVER with Chinese label is only used for China market.

Version

DATE	DESCRIPTION	REV.	CHECK
2024.01.23	Initial version.	V1.0	

MANUFACTRUER		
EDIT	CHECK	APPROVE