DL-200W-EXS

Features

- Series EXS
- Rated input voltage: 100 - 277Vac
- Active PFC function
- Meets EMC EN55035/55032 Class B for conductive radiation standards
- Maximum operating temperature up to 75°C
- Cold long strip design
- Function options:

  No suffix version: Regular constant voltage output

  R version: N+1 +function
- Overvoltage level III
- SCP/OVP/OLP/OTP protection
- 5-year warranty

E547387

Applications

Industrial control, industrial equipment, power system, rail transportation

Model list

Model No.	Input Voltage	Power Max.	Output Voltage	Output Current Max.	Ripple Voltage	PF.	T.H.D.	Efficiency Typ.	Voltage ADJ.
DL-200W-V12-EXS	100-277Vac	200W	12Vdc	16.67A	150mV	≥0.97	≤10%	92.5%	±10%
DL-200W-V15-EXS	100-277Vac	200W	15Vdc	13.33A	150mV	≥0.97	≤10%	92.5%	±10%
DL-200W-V24-EXS	100-277Vac	200W	24Vdc	8.33A	240mV	≥0.97	≤10%	93.5%	±10%
DL-200W-V36-EXS	100-277Vac	200W	36Vdc	5.56A	240mV	≥0.97	≤10%	93.5%	±10%
DL-200W-V48-EXS	100-277Vac	200W	48Vdc	4.17A	240mV	≥0.97	≤10%	93.5%	±10%
DL-200W-V12R-EXS	100-277Vac	200W	12Vdc	16.67A	150mV	≥0.97	≤10%	92.5%	±10%
DL-200W-V15R-EXS	100-277Vac	200W	15Vdc	13.33A	150mV	≥0.97	≤10%	92.5%	±10%
DL-200W-V24R-EXS	100-277Vac	200W	24Vdc	8.33A	240mV	≥0.97	≤10%	93.5%	±10%
DL-200W-V36R-EXS	100-277Vac	200W	36Vdc	5.56A	240mV	≥0.97	≤10%	93.5%	±10%
DL-200W-V48R-EXS	100-277Vac	200W	48Vdc	4.17A	240mV	≥0.97	≤10%	93.5%	±10%

Remark:

1. The test conditions for the above parameters: Ta = 25℃, 230Vac input, and the test was conducted after the equipment was operated at full load for 30 minutes.
2. It includes the setting error, linear adjustment rate, and load adjustment rate.
3. Method for measuring ripple and noise: Use a 12" twisted pair cable, and the terminals should be connected in parallel with 0.1μF and 47μF capacitors. The measurement is carried out within a 20MHz bandwidth.

Input characteristics

Parameter	Min.	Typ.	Max.	Remark
Rated input voltage	100Vac	230Vac	277Vac	-
Input voltage range	90Vac	-	305Vac	DC input range: 127-430Vdc
Rated frequency	47Hz	50/60Hz	63Hz	-
Power factor	-	≥0.97	-	100% load,@230Vac
	-	≥0.95	-	70% load,@230Vac
T.H.D.	-	< 10%	-	100% load,@230Vac
	-	< 20%	-	70% load,@230Vac
Input current	-	-	2.5A	100% load.@100Vac
Inrush current	-	-	50A	Cold start (at 25℃), @ 277 Vac
Leakage current	-	-	0.75mA	@ 277 Vac,RMS Max.

Output characteristics

Parameter	Min.	Typ.	Max.	Remark
Output tolerance	-	±1%	-	50-100% load,@230Vac
Line regulation	-	±1%	-	100% load,@230Vac
Load regulation	-	±1%	-	50-100% load,@230Vac
Setup/Rise Time	-	500ms/30ms	-	100% load,@230Vac
Hold up time	16ms	-	-	100% load,@230Vac

Protection

Function	Description
Output overload protection	1.4-1.8 times the rated output power; hiccup restart mode, which can automatically recover after the abnormal load condition is removed
Output short-circuit protection	Hiccup mode: recovers automatically after fault condition is removed
Over temperature protection	When the temperature exceeds 110°C, the system will enter protection mode. After the abnormality is removed, it can automatically restart.
Output overvoltage protection	The output voltage will shut down when it exceeds 1.08-1.2 times the rated voltage

Function

Function	Function declaration
DC OK relay contacts	Relay contact rated value (maximum): 30Vdc/1A, 30Vac/0.5A resistance load
RC Remote switch	1. The power supply will be activated when the DC voltage of the signal source is ≤ 0.8V 2. The power supply will be turned off when the DC voltage of the signal source is ≥ 4 - 30V. The maximum value should not exceed 30Vdc/1A 3. The power supply will not operate within the range of 0.8 - 4V
Redundant (R version)	Parallel application: When one of the power supplies fails to operate, the other power supply automatically starts to work; N+1 parallel redundancy, same model parallel connection, the load characteristics must not exceed the rated load of any single power supply.

Environmental

Environmental Categories	Parameter
Maximum operating temperature, range	-40 ~ +75℃, 20 ~ 90% RH, @100-277Vac. For details, please refer to the "Temperature and Output Power" curve.
Storage temperature, humidity	-40~+80°C，10~90%RH
Vibration	10 ~ 500Hz, 5G 12min/cycle, 72 min, each along X, Y, Z axes
MTBF	230Khrs min. MIL-HDBK-217F (Ta=25℃)
Lifetime	70,000 hours，@230Vac，TC≤75℃，please refer to “Lifetime/ Ambient temperature curve”

Safety and EMC

Safety categories	Standard		
Safety	UL62368-1, TUV BS EN/EN62368-1, BS EN/EN60335-1, BS EN/EN61558-1/-2-16, GB 4943.1		
EMC	EMI	BS EN/EN55032, EN55035	Class B
	Harmonic Current	BS EN/EN 61000-3-2	Class B
	ESD	BS EN/EN 61000-4-2	
	EFT/Burst	BS EN/EN 61000-4-4	
Lightning protection level	Differential mode L-N ± 2KV (2Ω), common mode L，N-G ± 4 KV (12Ω),Refer to IEC61000-4-5 2014		
Pressure resistance	I/P-O/P：4KVac，I/P-PE：2KVac，O/P-PE：1.25KVac		
Insulation impedance	I/P-PE：100MΩ / 500VDC，I/P-O/P：100MΩ / 500VDC / 25℃/ 70% RH		

Remark：

1. The power supply is considered a component which will be installed into the terminal equipment.
2. The EMC is affected by the entire equipment.
3. The termina equipment must be reconfirmed to meet the EMC directives.

Parametric curves

PF/Output Power

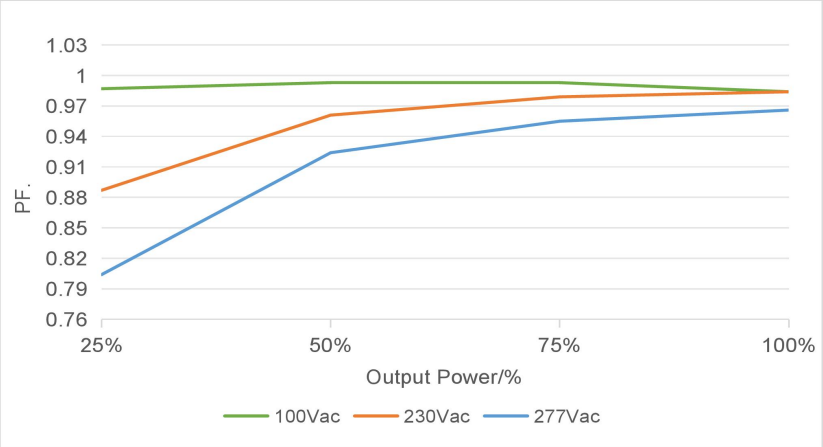

Efficiency/Output Power

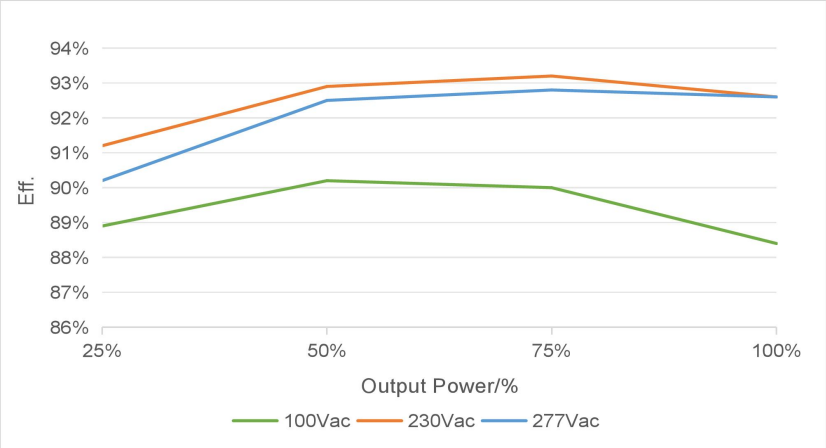

T.H.D./Output Power

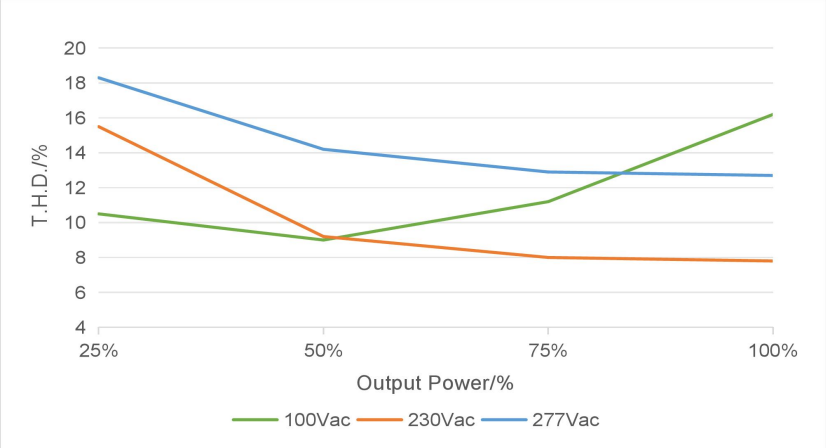

Input Voltage/ Output Power (static curve)

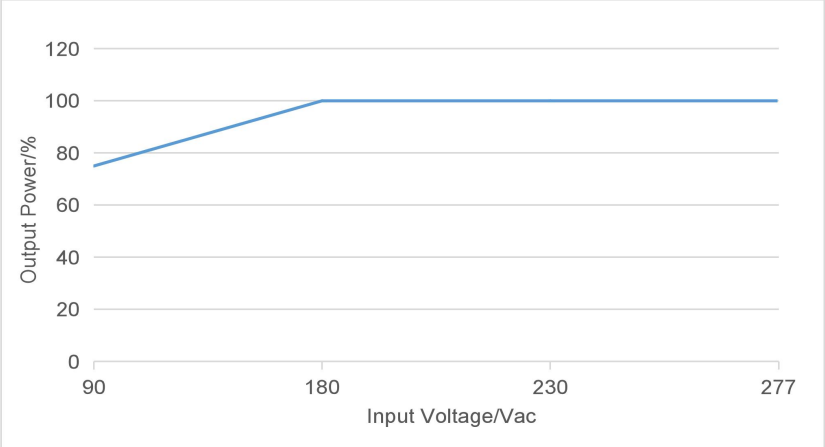

Output Power/ Ambient temperature (Aluminum-free plate)

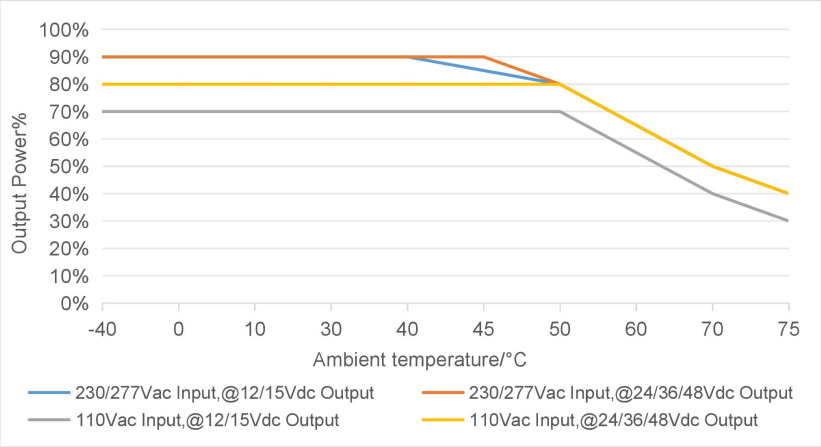

Output Power/ Ambient temperature (Aluminum-containing plate)

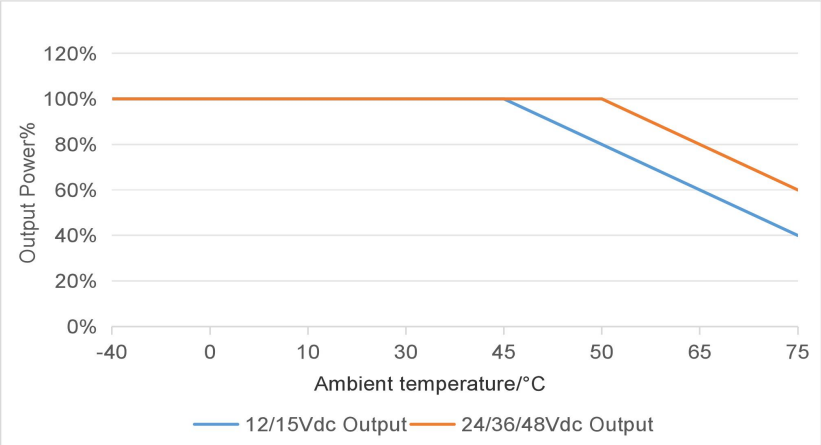

Lifetime/TC

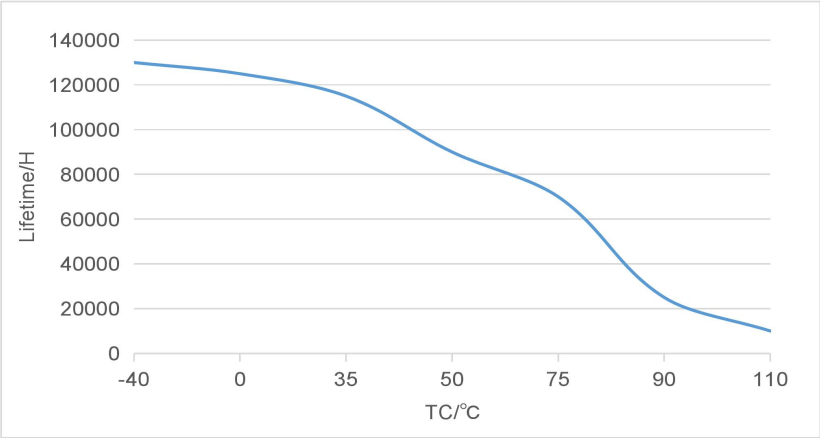

Inrush current

Input voltage	Peak current	T (@50% peak current)
100Vac	18.6A	536us
230Vac	21.2A	854us
277Vac	22.1A	1022us

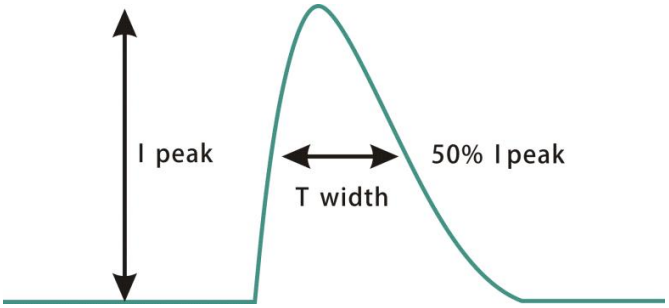

Installation instructions for aluminum plates:

1. This product is a self-cooling type and should be installed on a heat-dissipating aluminum plate for optimal performance.
2. The recommended aluminum plate is shown in the figure below. To enhance heat dissipation, it is advised to apply thermal grease on the surface of the aluminum plate or ensure the mounting surface remains smooth.

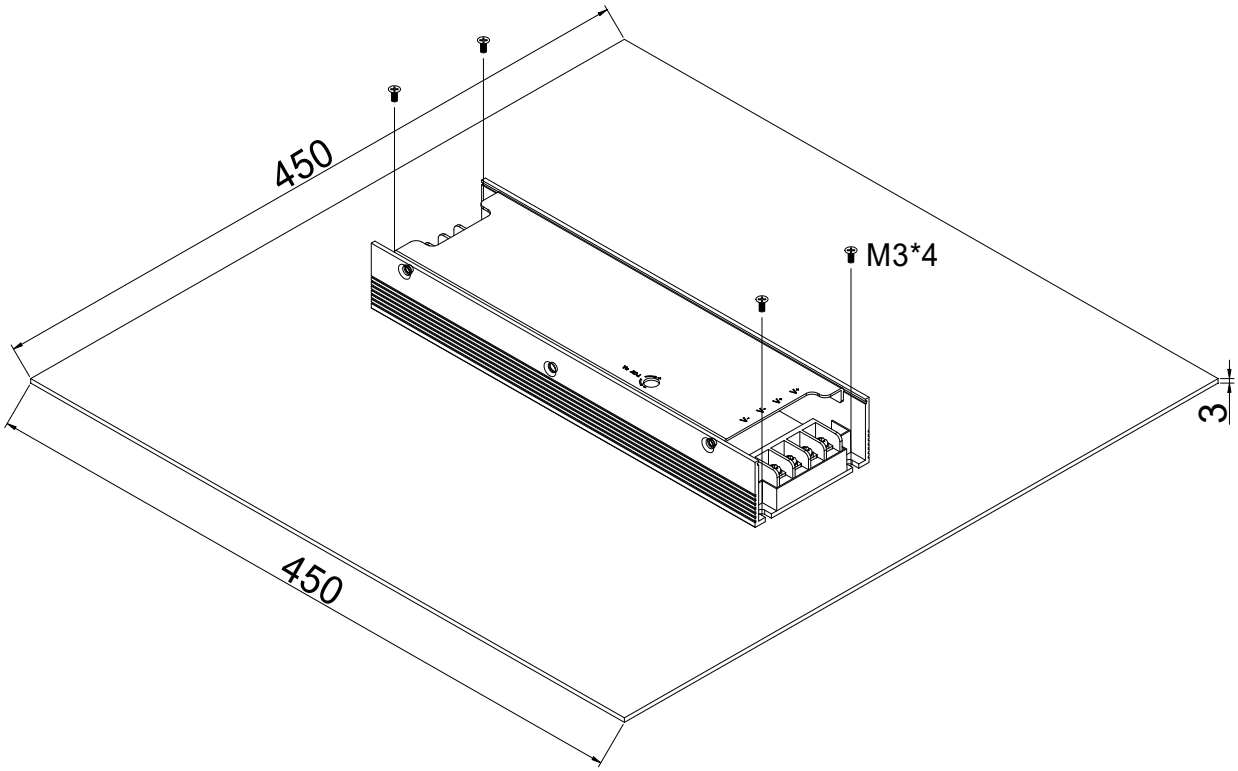

Mechanical specification

Size&Weight

Size&Weight	L194*W53*H26mm	0.47kg

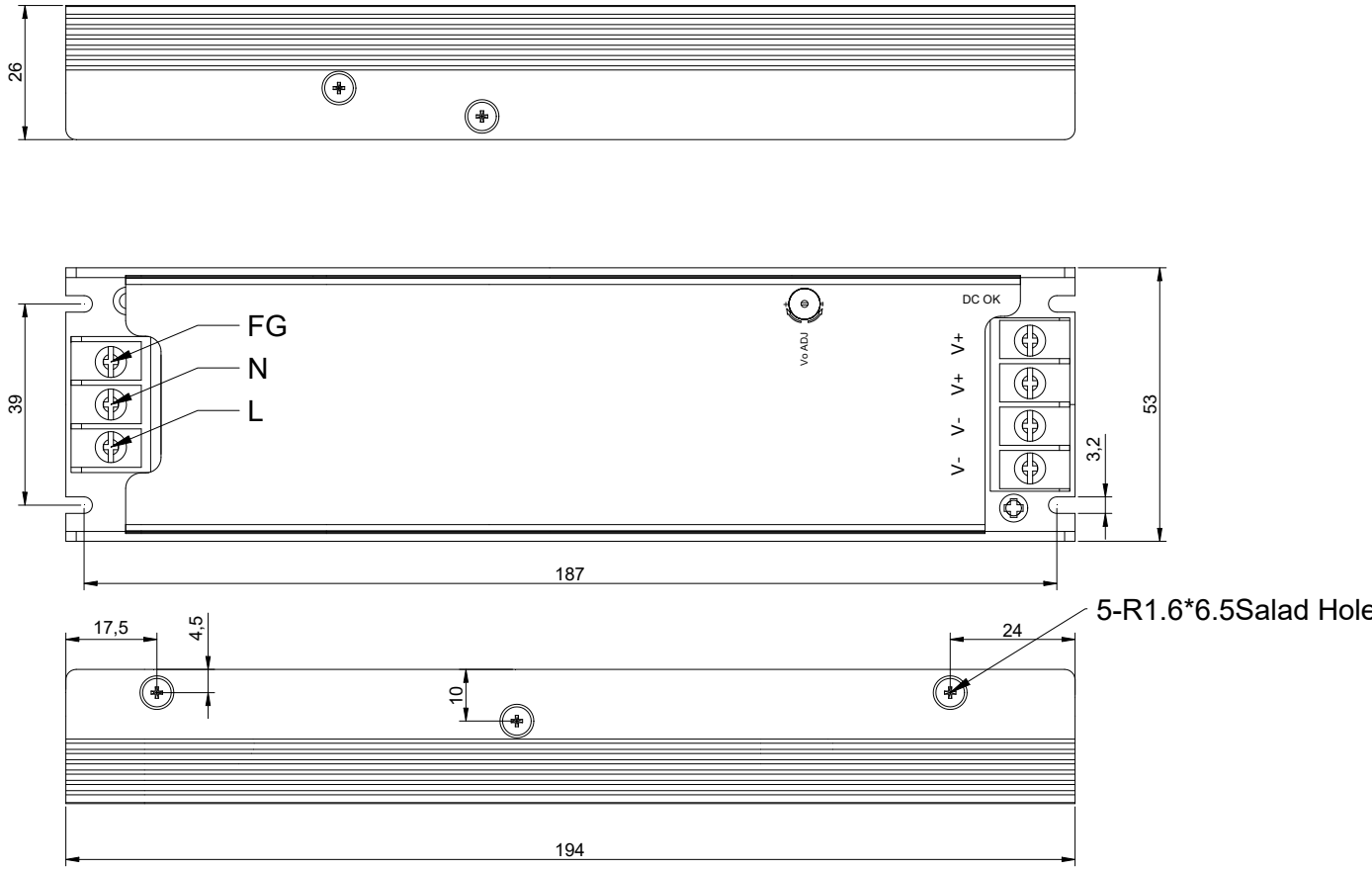

Packaging
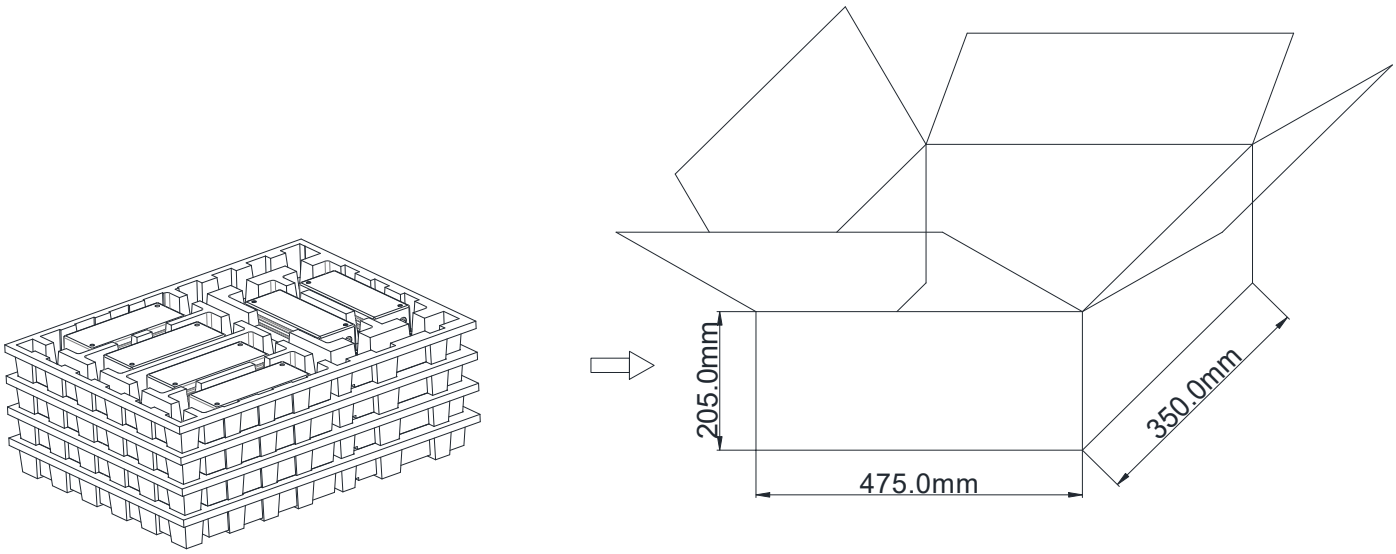
Packaging（mm）	L475*W350*H205	24 PCS / Carton