广东东菱电源科技有限公司

Guangdong Done Power Technology Co.,Ltd.

SPECIFICATION

CUSTOMER：		
MODEL NO.：	DL-20H-LAC	
VERSION:	V1.2	
CUSTOMER		
TESTED BY	CHECKED BY	APPROVED BY
Please return to us one copy of "SPECIFICATION FOR APPROVAL" with you approved signature..		
MANUFACTRUE		
MADE BY	CHECKED BY	APPROVED BY
廖淋红 LLH 2023.05.31 08:38:15 +08'00'		张鸿生 数字签名者：张鸿生 DN：cn=张鸿生, o, ou, email=978425630@qq.com, c=<无 日期：2023.06.13 17:37:28 +08'00'

Guangdong Done Power Technology Co.,Ltd.

广东东菱电源科技有限公司

No. 3-1&3-2,Kanglong 3rd Road,XinMao Industry Zone,Henglan Town,

Zhongshan City,Guangdong Province,P.R.China Post code:528478

地址：广东省中山市横栏镇新茂工业区康龙三路 3 号之一之二 邮编：528478

TEL:0760-89838399 89838379 FAX:0760-89831157 89838396

■ VERSION

DATE	CAUSES OF CHANGE	REV.	CHECKED BY
2019.7.23	Initial version	V1.0	
2019.11.21	Modify assembly drawing (page 7) , increase the ripple of the output current (page 4) and change product picture (page 3)	V1.1	
2023.5.15	Change logo	V1.2	2023.06.13 15:30:35 +08'00'

■ FEATURES

- ◇ Constant current mode power supply
- ◇ AC input: 220-240V ~ 50/60Hz
- ◇ Fully isolated plastic case, Class II diver
- ◇ Cooling by free air convection
- ◇ PF > 0.95 & THD < 12% full load
- ◇ Protections: short circuit/Over voltage with non-latching
- ◇ High efficiency /High reliability
- ◇ Surge : 1 KV (2 ohm) IEC61000-4-5 2014
- ◇ CCC/TUV/CE/SAA approved
- ◇ 5 years warranty

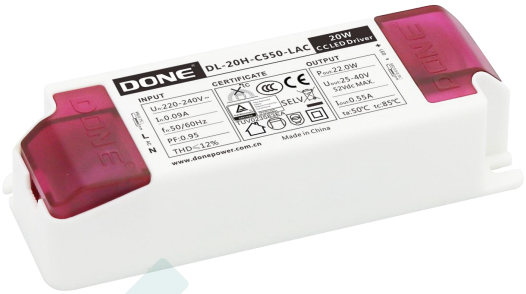

■ TYPICAL APPLICATIONS

Commercial lighting , Household lighting

■ MODEL LIST

Model	AC Input	Output voltage	Output current	Efficiency	THD	PF
				230Vac	230Vac	230Vac
DL-20H-C550-LAC	220-240Vac 50/60Hz	25~40Vdc	550mA	>86%	< 12%	> 0.95
DL-20H-C500-LAC	220-240Vac 50/60Hz	25~42Vdc	500mA	>86%	< 12%	>0.95
DL-20H-C450-LAC	220-240Vac 50/60Hz	25~42Vdc	450mA	>86%	< 12%	>0.95
DL-20H-C400-LAC	220-240Vac 50/60Hz	25~42Vdc	400mA	>86%	< 12%	>0.9

■ SPECIFICATION

◇ INPUT

Rated voltage	220 -240Vac
Frequency	50/60Hz
Power factor(PF)	>0.95 @230Vac full load
Total harmonic distortion(THD)	<12%@230Vac full load
Input current	0.2A @230Vac
Inrush current (typ.)	Cold start 30A @230Vac

◇ OUTPUT

Model	DL-20H-C550-LAC	DL-20H-C500-LAC	DL-20H-C450-LAC	DL-20H-C400-LAC
Rated current	550mA	500mA	450mA	400mA
Output current range	523-577mA	475-525mA	428-472mA	380-420mA
Output voltage range	25~40Vdc	25~42Vdc	25~42Vdc	25~42Vdc
Rated output power	22W	21W	18.9W	16.8W
No load voltage	52V MAX.	52V MAX.	52V MAX.	52V MAX.
Efficiency	>86%@220Vac full load	>86%@220Vac full load	>86%@220Vac full load	>86%@220Vacfull load
Accuracy off output current	±5%	±5%	±5%	±5%
Line regulation	±5%	±5%	±5%	±5%
Load regulation	±5%	±5%	±5%	±5%
Setup time	<500ms @ 220Vac	<500ms @ 220Vac	<500ms @ 220Vac	<500ms @ 220Vac
The ripple of output current	≤5%			

◇ PROTECTION

Over load	Non−latching : Constant current limiting, recovers automatically after fault condition is removed
Short	Hiccup and non-latching,:recover automatically after fault condition is removed
Over voltage	hiccup or when it is at the highest point of output voltage the product would not be hurt when the fault is excluded or is start working again the power supply is working normally

NOTE :

1) All parameters NOT specially mentioned are measured at 230VAC input, rated load and 25℃ of ambient temperature.
2) Tolerance : includes set up tolerance, line regulation and load regulation.
3) Constant current operation region is within 50% ~100% rated output voltage. This is the suitable operation region for LED related applications。

■ ENVIRONMENT

WORKING TEMP.	-25 ~ +50℃ (Refer to "Derating Curve")
WORKING HUMIDITY	20 ~ 95% RH, non-condensing
TEMPERATURE CASE	<85℃ (Refer to "SERVICE LIFE")
STORAGE TEMP, HUMIDITY	-25 ~ +80℃, 10 ~ 95% RH
VIBRATION	10 ~ 500Hz, 5G 12min./1cycle, period for 72min. each along X, Y, Z axes
WITHSTAND VOLTAGE	I/P-O/P:3.75KVAC
ISOLATION RESISTANCE	I/P-O/P:100M Ohms / 500VDC / 25℃/ 70% RH
MTBF	470K hrs min. MIL-HDBK-217F (25℃)

■ SAFETY & EMC

SAFETY	GGB 19510、 EN 61347-1、EN 61347-2-13、J61347
EMC	EMI : GB 17743、EN 55015、EN 61000-3-2 、FCC Part15、 EMS：EN 61000-3-3 EN 61000-4-2、EN 61000-4-3、EN61000-4-4、EN 61000-4-5、EN 61000-4-6EN 61000-4-8、EN 61000-4-11、EN 61547
SURGE	L-N Class Ⅱ +/- 1 KV (2 ohm) (IEC61000-4-5 2014)
LEAKAGE CURRENT	<5mA / 230Vac

NOTE :

The power supply is considered as a component that will be operated in combination with final equipment. Since EMC performance will be affected by the complete installation, the final equipment manufacturers must re-qualify EMC

Directive on the complete installation again.

■ OUTPUT VOLTAGE VS PF

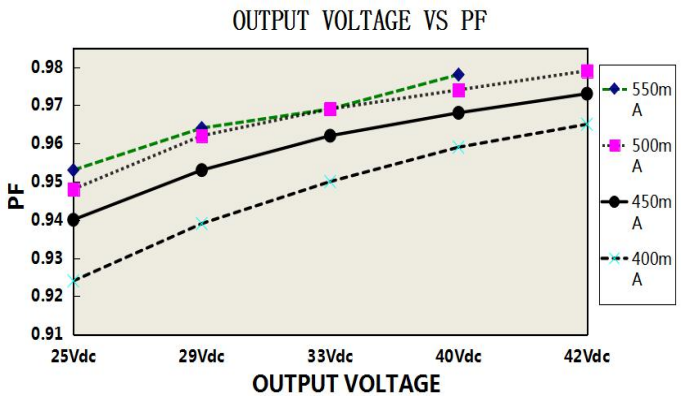

■ OUTPUT VOLTAGE VS THD

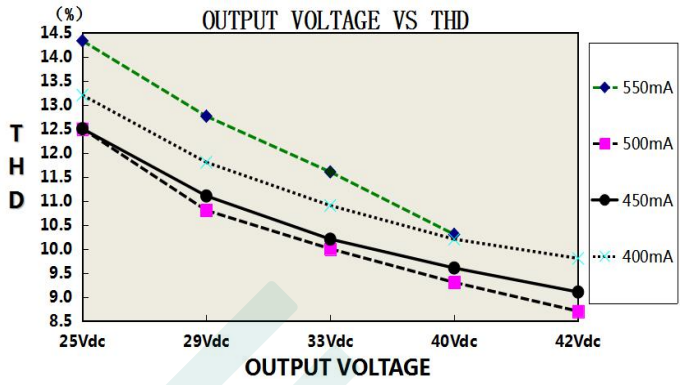

■ OUTPUT VOLTAGE VS EFFICIENCY

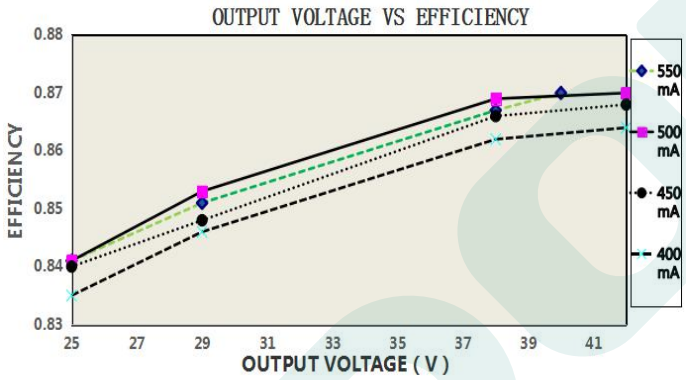

■ LOAD DERATING CURVE

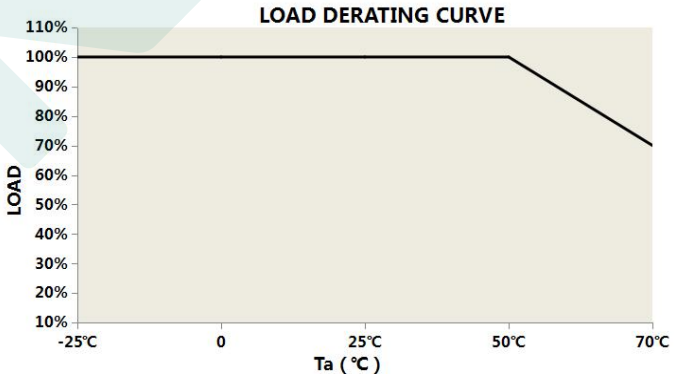

■ INPUT VOLTAGE VS LOAD

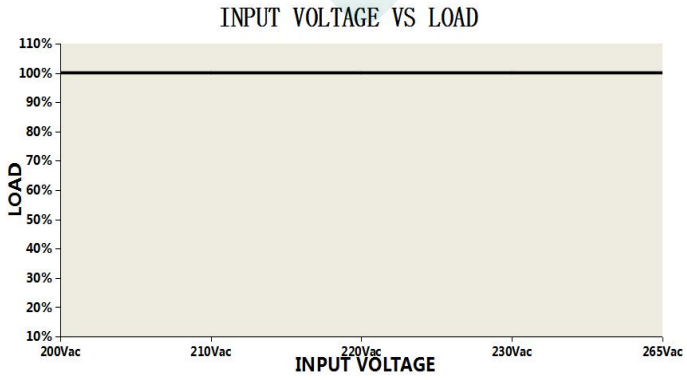

■ LIFE VS Tc

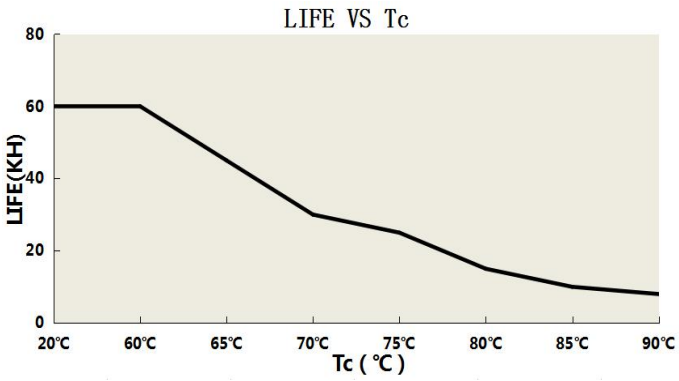

■ MECHANICAL SPECIFICATION & PACKING:

DIMENSION (mm)	106*38*25
PACKING	/

机壳型号： FP02 单位:mm

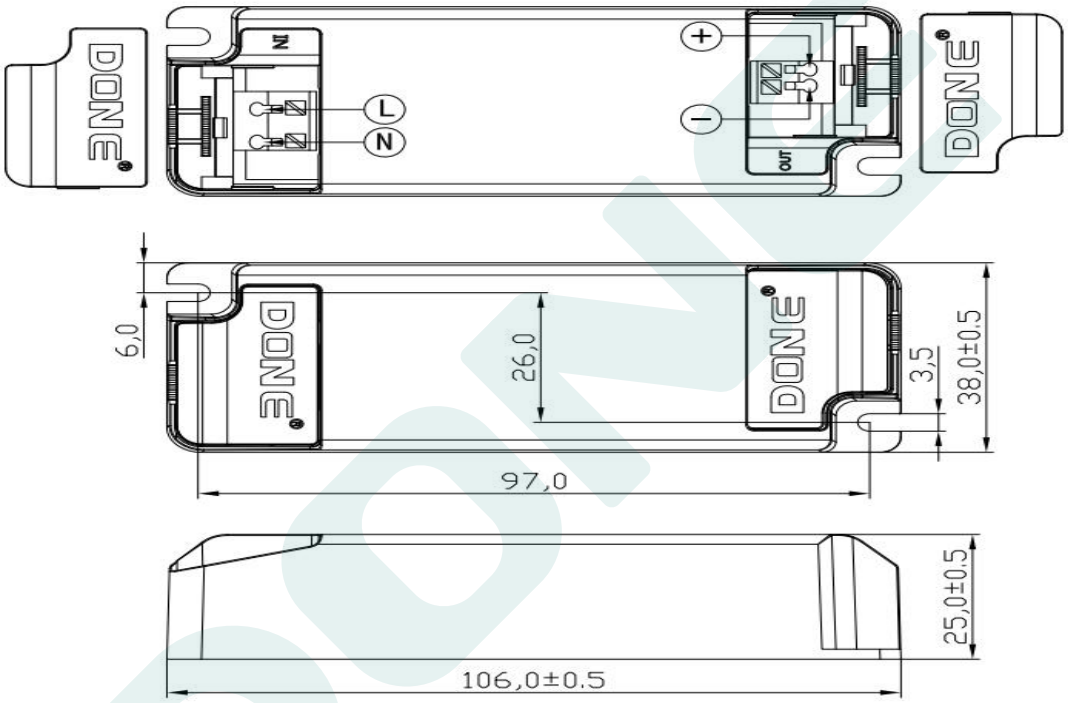

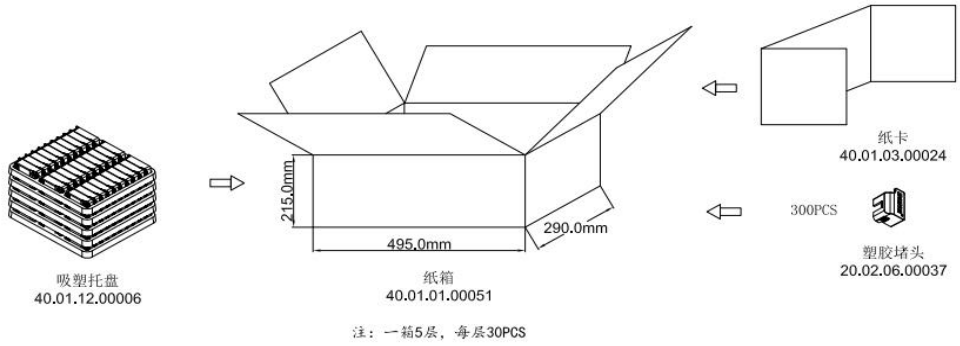

■ WEIGHT

Weight	66g/PCS