File No.	353EG17226	SHEET	1/1

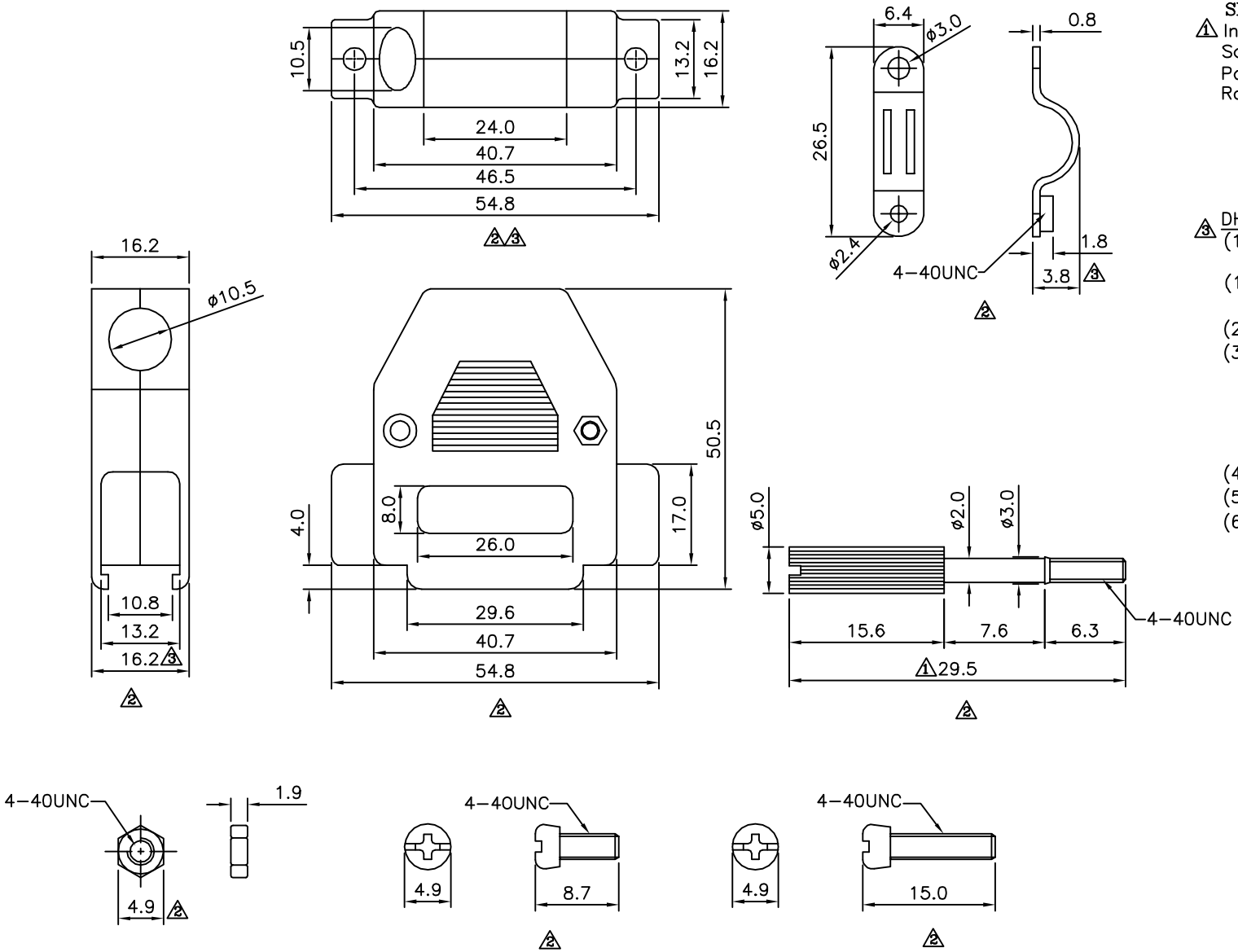

SPECIFICATION

1. Insulator:ABS(UL94HB)
   Screw,Nut&SR:Steel,Nickel Plated
   Packing:1 Set/Bag
   RoHS Compliant

3. DHR (1) 25 (2) X (3) T (4) - 1 (5) - H (6)

(1) DHR:D-SUB Screw-On Hood Cable Outlet 45°
(2) 25:No. Of Position
(3) X:D-SUB Hood Insulator Color
B:Beige
C:Chromate Plated
G:Gray
K:Black
(4) T:With Thumbscrew
(5) 1:One Bag/Set
(6) H:RoHS Compliant

A MEMBER OF AUK GROUP
太聯事業股份有限公司
AUK CONTRACTORS CO., LTD.

CATEGORY		APPROVED BY	EMILY
PART No.	DHR25XT-1-H	CHECKED BY	HZF
DRAWING No.	DHR25XT-1-H	DRAWING BY	SAN
SCALE	NONE	REV.	A3

UNLESS OTHERWISE SPECIFIED TOLERANCES ARE
2 X. ±0.5
.X ±0.3
.XX ±0.2
ANG. ±5°
UNIT mm

NO.	REV.	REVISIONS	CHK	DATE
3	A3	Modify Data	HZF	07/16/2014
2	A2	Modify Data	HZF	10/05/2011
1	A1	Modify Data	HZF	12/10/2008
0	A0	NEW RELEASE	HZF	02/07/2008