D1RFRD006

REVISION RECORD				
REV	ECN	DESCRIPTION	DRFT	DATE

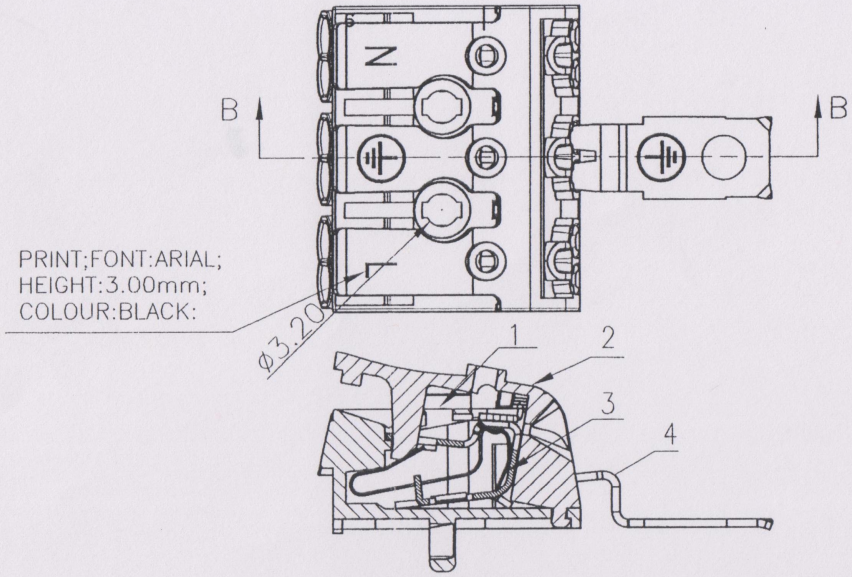

SECTION B–B

Notes:
1.DIMENSION SHALL BE INTERPRETED PER ASME Y14.5–2009.
2.RATED VOLTAGE/CURRENT.: UL1059: 300V/15A
VDE: 450V/24A
3.OPERATION TEMPERATURES: –40°C~+105°C
6.WITHSTANDING VOLTAGE: AC2500V/1Min
7.INSULATION RESISTANCE: 5000MΩ/DC1000V
8.UNDIMENSIONED TOLERANCES:

PITCH RANGE IN MM			NOMINAL DIMENSION RANGE IN MM					
TO 6	OVER 6 TO 10	OVER 10 TO 24	TO 30	OVER 30 TO 60	OVER 60 TO 100	OVER 100 TO 150	OVER 150	
±0.10	±0.15	±0.25	±0.20	±0.30	±0.50	±0.70	±1.00	0.05/10

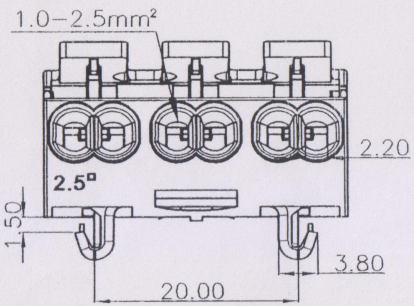

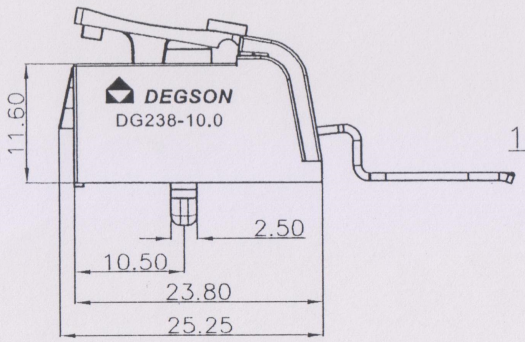

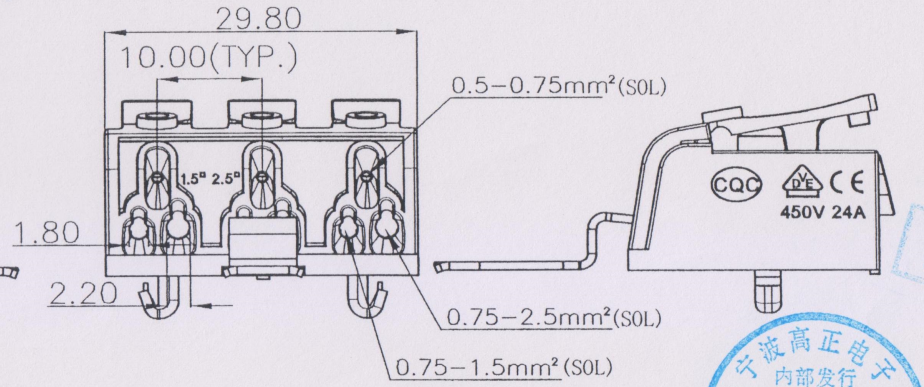

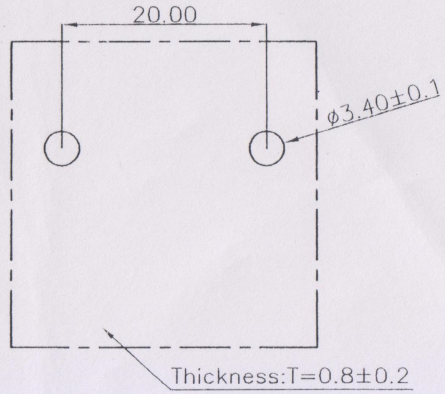

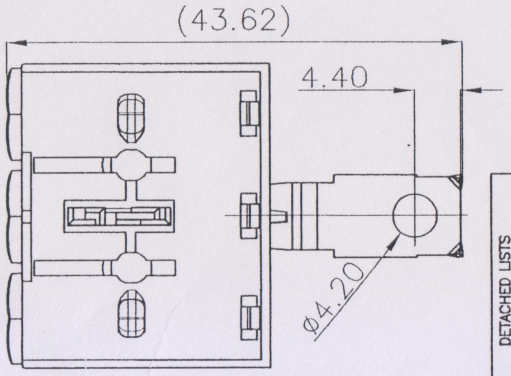

ITEM	NAME OF PART	NO. OF PART	Q"TY	MATERIAL	NOTES
4	DG238-GROUND PIN(BIG)	3028B00030(H)	1	BRASS	Ni
3	DG238 Clamp riveting joint spring	X000004490(H)	3		
2	DG238-10.0-COVER	3028C1103A(H)	1	PA66	UL94V-2
1	DG238-10.0-HOUSING	3028A1103A(H)	1	PA66	UL94V-2

DETACHED LISTS

MM (INCH)
TOLERANCES EXCEPT AS NOTED
.X ± .X" ±
.XX ± .XX" ±
.XXX ± .XXX" ±
ANGLES ± 1°
THIRD ANGLE PROJECTION

MATERIAL:
FINISH:
PART NO.: Series DG238-10.0
APPD: Alex 12/17/13
CHKD: Alan 12/17/13
DRFT: NPX 12/16/13"

DEGSON® 宁波高松电子有限公司 NINGBO DEGSON ELECTRICAL CO., LTD

NAME: DG238-10.0-03P-11-05A(H)
TITLE: Assembly Drawing
DRAWING NO.: DG238-10.0-E48
REV: T0
DO NOT SCALE DRAWING
SCALE: 1:1
SHEET: 1/1

宁波高正电子 内部发行 2013.12.19 文管中心 研发

1