FOR-1351 Rev.1.0

REVISION RECORD				
REV	ECN	DESCRIPTION	DRFT	DATE
D0-2	/	Outlook amendment	WW	2018.05.25
D0-3	/	Revised drawings	WW	2018.07.06

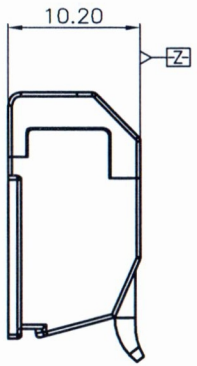

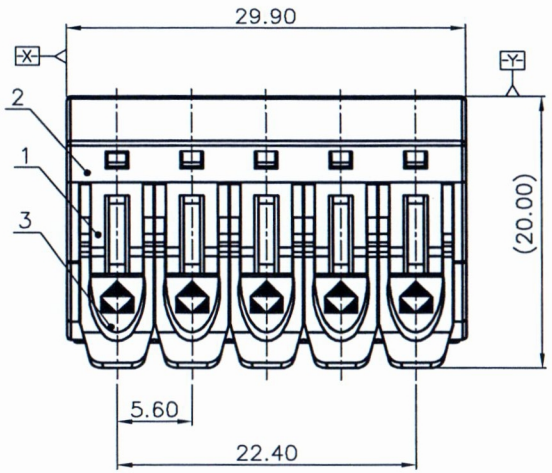

DG221 – 5.6 – 05P – 1Y –00A (H)

- DG221: (Series No.)
- 5.6: (Pitch)
- 05P: (Poles)
- 1Y: (Single Pitch)
- 00A: (Color): 1.(Grey) 2.(Blue) 3.(Black) 4.(Green) 5.(Orange) 6.(Red) 7.(Transparent) 8.(Yellow) 9.(White)
- 00A: (Standard)
- (H): (RoHS)

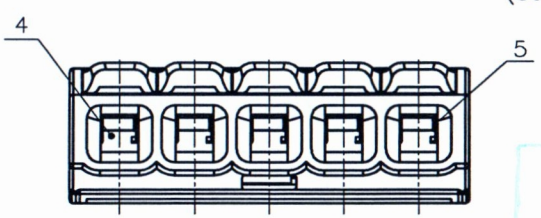

NOTES1:

UL Standard

1.Rated voltage/current : 300V/20A

2.Wire range : 24~12AWG

IEC Standard

1.Rated voltage/current : 450V / 32A

2.Wire range : 0.2~4.0mm²

NOTES2:

1.Dimension shall be interpreted per ASME Y14.5–2009

2.Pitch : 5.6mm, Poles : 05P

3.Stripping length : 12mm

4.Withstanding voltage : AC2500V/1Min

5.Operating temperature: –40°C~+85°C

6.Undimensioned tolerances:

Pitch range in mm			Nominal dimension range in mm					– ⌒ ⌭
TO 6	Over 6 TO 10	Over 10 TO 24	TO 30	Over 30 TO 60	Over 60 TO 100	Over 100 TO 150	Over 150	0.1/10 ∠
±0.15	±0.20	±0.30	±0.30	±0.50	±0.70	±1.00	±1.30	±2°

7.RoHS Compliance

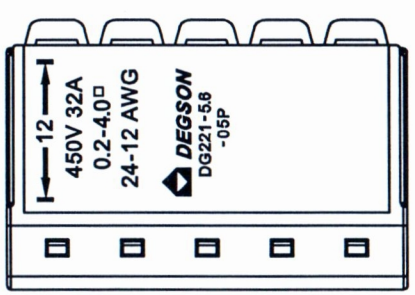

仅供参考用

签字: 黄贵凡

日期: 2018.07.06

ITEM	NAME OF PART	MATERIAL	NOTES
5	Current carrier	Copper alloy	Sn Plated
4	Spring	Stainless steel	
3	Button	PA66+GF	UL94V–0
2	Cover	PC	UL94V–2
1	Housing	PC	UL94V–2

DETACHED LISTS

PART NO.: /

APPD: Alan 2018.07.06

CHKD:

DRFT: WW 2018.04.18

THIRD ANGLE PROJECTION

DEGSON 宁波高松电子有限公司 NINGBO DEGSON ELECTRICAL CO., LTD

NAME: DG221-5.6-05P-1Y-00A(H)

TITLE: CUSTOMER DRAWING | REV: D0–3

DRAWING NO.: DG221–5.6–05P–C01 | SHEET: 1/1

MM (INCH) | DO NOT SCALE DRAWING | SCALE: 1:1