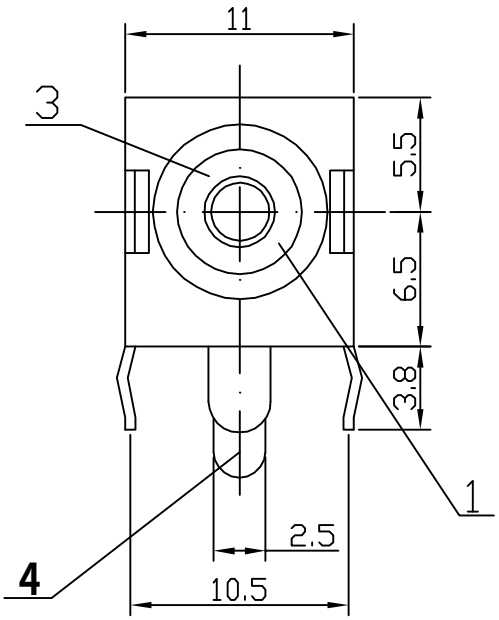

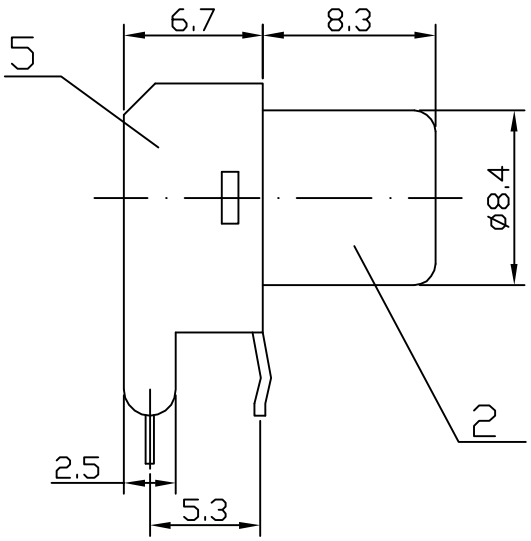

Dimensions of PC board holes

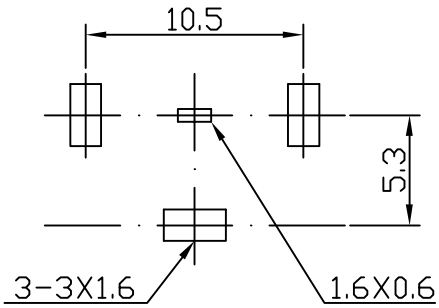

Color sketch

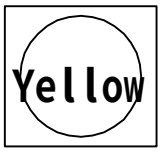

Circuit sketch

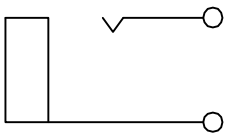

Notes、Unspecified tolerance ls:

0～6±0.1mm
6～20±0.2mm
＞20±0.3mm

No:	Name	QTY	Material	Coat Cladding Material
5	Shield cover	1	Iron	D.Cu/Sn
4	Connect Needle	1	QSn6.5-0.1 δ=0.4	D.Cu/Sn
3	Washer	1	ABS	———
2	Outer Conductor	1	H65 t=0.4	D.Cu/Sn
1	Base	1	ABS	———

Nurnber of old Base Map					
Nurnber of Base Map	Mark	Place Number	Changed document number	Signer	Date
Date	Designer	WenShengQian	Standardize	JingDanZhao	
Signer	Proofreader		Approved	GuangQu	
	Verifier	ZiGuiXia			
	Technology		Date	2005.04.22	

AV-8.4-3B Pin Jack

Design Mark				Weight	Proportion
A	B				1:1
1 piece together				the first piece	

ZHEJIANG ZUANBAO ELECTRONIC Co.,Ltd.

PDF 文件使用 "pdfFactory Pro" 试用版本创建 www.fineprint.com.cn