D1RFRD006

REVISION RECORD				
REV	ECN	DESCRIPTION	DRFT	DATE
1		Drawing emend	csx	04/04/06"
2		增加VDE刻字	WLM	10/08/03"
3	10-0329	增加标注尺寸	COCO	10/07/10"
4	11-0034	改善螺帽易掉落，使用变更后塑件与螺帽	HD	03/08/11"
5	11-0253	修改螺帽孔结构	ZMT	10/20/11"
6	14-0107	黄铜变紫铜，料号变更;工频耐压变更为额定冲击电压	HHJ	12/15/14"

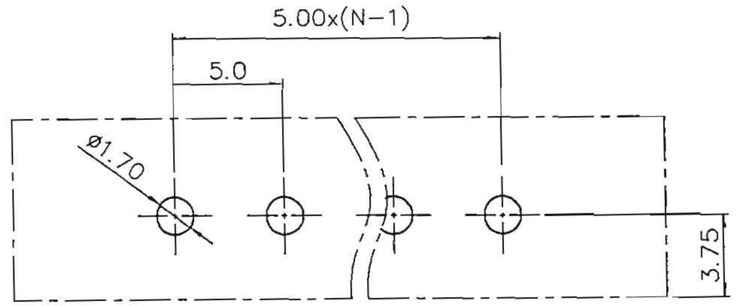

P.C.B LAYOUT

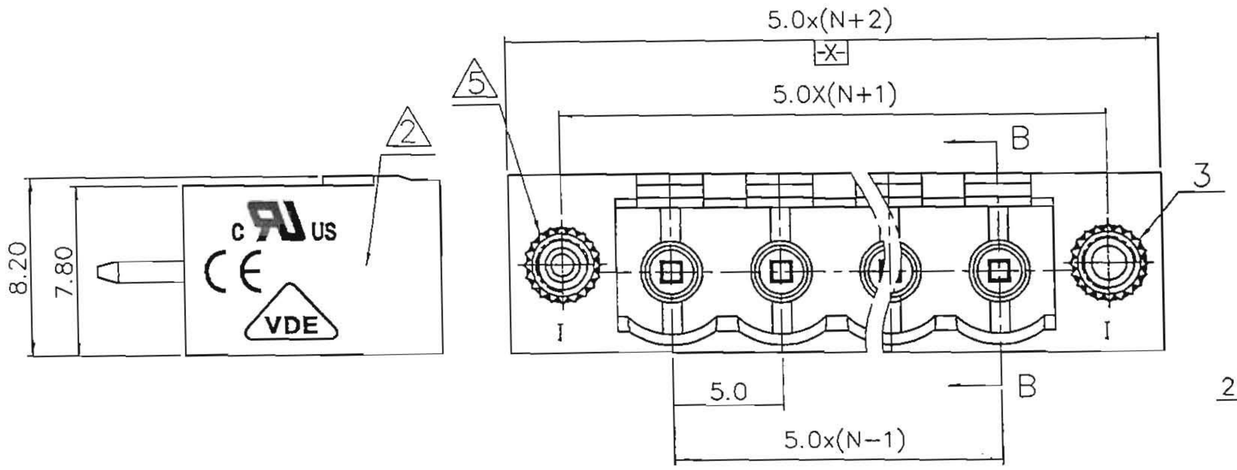

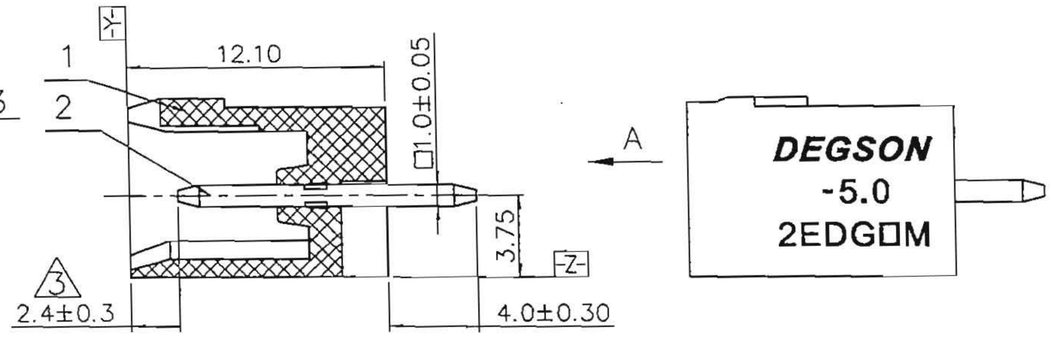

SEC B-B

NOTES:
1. DIMENSION SHALL BE INTERPRETED PER ASME Y14.5-2009.
2. PITCH: 5.0MM ,POLES: 2-22P
3. RATED VOLTAGE/CURRENT: UL 300V/15A
   VDE 320V/20A
4. OPERATION TEMPERATURES: -40°C~+105°C
5. RATED IMPULSE VOLTAGE: 4.0KV 6
6. INSULATION RESISTANCE: 5000MΩ/DC1000V
7. UNDIMENSIONED TOLERANCES:

Pitch range in mm			Nominal dimension range in mm					
to 6	over 6 to 10	over 10 to 24	to 30	over 30 to 60	over 60 to 100	over 100 to 150	over 150	
±0.10	±0.15	±0.25	±0.2	±0.3	±0.5	±0.7	±1.0	0.05/10

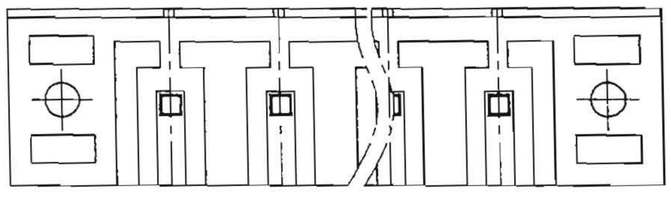

VIEW A

ITEM	NAME OF PART	NO. OF PART	Q"TY	MATERIAL	NOTES
4	2EDG Screw cap	S000001040(H)	2	BRASS	
6	2EDGV-Pin header	1007B00330(H)	XX	COPPER	Sn Plated
4	2EDGVM-5.0 Housing	1021A0YXXC(H)	1	PA66	UL94V-0

DETACHED LISTS

MM (INCH)

TOLERANCES EXCEPT AS NOTED

.X ± .XX ± .XXX ±

.X° ± .XX° ± .XXX° ±

ANGLES ± 1°

THIRD ANGLE PROJECTION

MATERIAL:

FINISH:

PART NO.: Series 2EDGVM-5.0

APPD: Deron 12/16-14

CHKD: Xm 12/16/14

DRFT: HOME 01/12/06"

DEGSON®

宁波高正电子有限公司
Ningbo Degson Electrical Co., Ltd.

NAME: 2EDGVM-5.0-XXP-1Y-00A(H)

TITLE: ASSEMBLY DRAWING

DRAWING NO.: 2EDGVM-5.0-E02

REV: T6

DO NOT SCALE DRAWING | SCALE: N/A | SHEET: 1/1