D1RFRD006

REVISION RECORD				
REV	ECO	DESCRIPTION	DRFT	DATE
1		Drawing emend	WF	12/31/05"
2		修改图面	CSX	05/04/07"
3		增加VDE、CE认证标志	LJH	01/14/08"
4	11-0230	最长线数由12P改为13P	Golden	12/15/11"
5	12-0216	夹子电镀由镀镍改为镀锡	XLM	01/07/13"

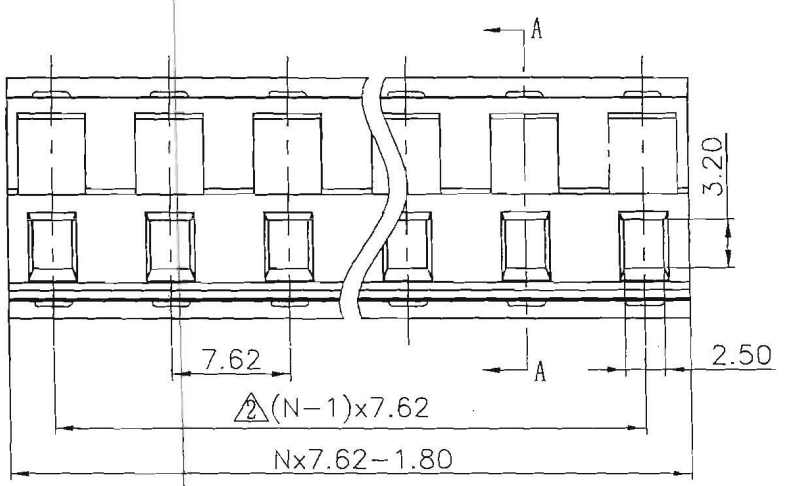

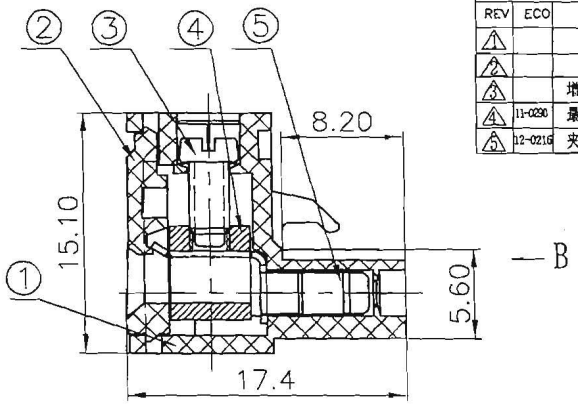

SECTION A-A

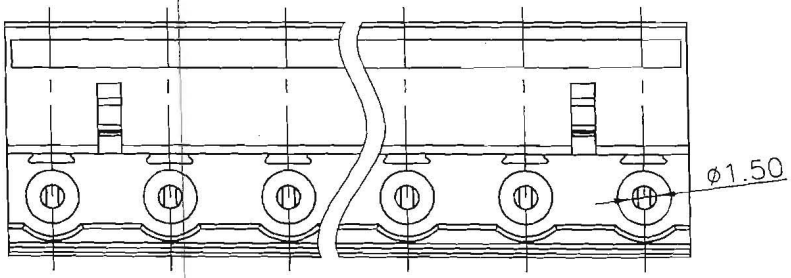

VIEW-B

Notes:

1. Pitch: 7.62mm Poles:2-13P 4
2. Rated voltage/current:UL 300V/15A
   VDE 400V/20A
3. Insulation resistance: 5000MΩ/1000V
4. Withstanding voltage: AC2500V/1Min
5. Wire range: 28～12AWG 2.5mm²
6. Temp. Range: -40℃～+105℃
7. Torque: 4.08kgf.cm(3.6lb.in)
8. Undimensioned Tolerances:

Pitch range in mm			Nominal dimension range in mm					—
to 6	over 6 to 10	over 10 to 24	to 30	over 30 to 60	over 60 to 100	over 100 to 150	over 150	⌒ ▱
±0.10	±0.15	±0.25	±0.2	±0.3	±0.5	±0.7	±1.0	0.05/10

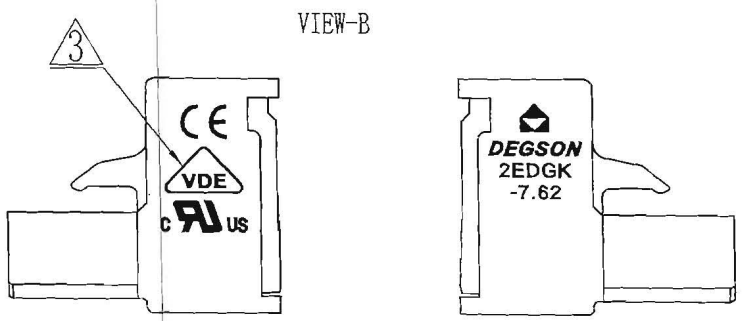

宁波高正电子 内部发行 2014.7.11 文管中心 研发

ITEM	NAME OF PART	NO. OF PART	Q"TY	MATERIAL	NOTES
1	2EDGK-7.62-Housing	1006A0YXXA(H)	1	PA66	UL94V-0
5	2EDG Clamp	1005B00010(H)	XX	Phoshor bronze	Sn plated
4	DG128 Brass cage	X000000020(H)	XX	Brass	Ni plated
3	2EDG"-" Screws-M2.5	S000001370(H)	XX	Steel	$Cr^{3+}Zn$
2	2EDGK-7.62-Cover	1006C0YXXA(H)	1	PA66	UL94V-0

MM (INCH)
TOLERANCES EXCEPT AS NOTED
MM .0 ± .00 ± .000 ± ± ± ±
ANGLES ± 1°
THIRD ANGLE PROJECTION
DETACHED USTS

DFTD DZJ DATE 09/26/05"
CHKD DATE
MFG DATE 01/10/13
APPVL DATE 01/14/13"
MATERIAL : Series 2EDGK-7.62
G.E :
FINISH :
SCALE : 1:1

DEGSON® 宁波高正电子有限公司 Ningbo Degson Electrical Co., Ltd.

NAME 2EDGK-7.62-XXP-1Y-00A(H)

DRAWING NO. 2EDGK-7.62-E05 /PART NO.

SIZE A3 REV T5 01/07/13"

DO NOT SCALE DRAWING SHEET 1 OF 1