2DD-B01W-XX

Barrier Terminal Blocks > Bi-level

Date:2020-08-10Version:1.2

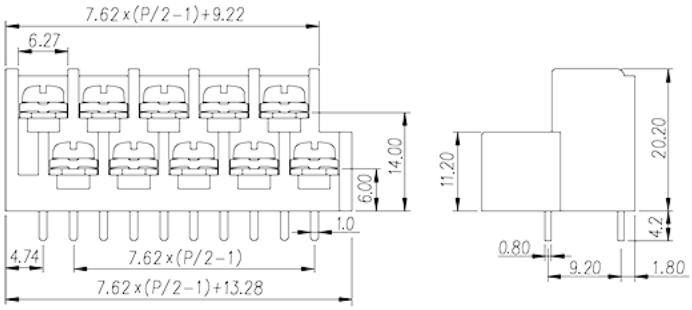

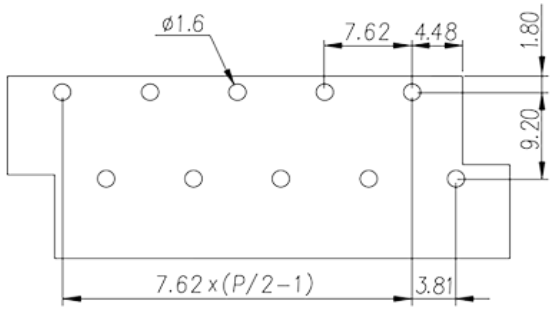

The web catalog is for reference only. Dinkle remains the right of product modification and engineering change of the design. The final product is made according to engineering drawing.

Product Description

Pitch : 7.62mm , M3 , 300V , 15A

General information

Short description	Barrier terminal blocks , Screw connection
Category	Bi-level terminal blocks
Pitch (mm)	7.62
Color	Black(default)
Connection method	Screw connection
Type of locking	Without
Pin demensions (Thickness x Width)(mm)	0.8x1.0
PCB hole diameter (mm)	1.6
Level	Bi-level

Material information

Insulation material	PBT
Insulation material group	IIIa
Flame retardant rating , compliant with UL94	V0
Conductor material	Copper Alloy
Plating of conductor surface	Tinned

© DINKLE ENTERPRISE CO ,LTD. ALL RIGHT RESERVED

Connection data-IEC

Rated current (A)	17.5
Rated voltage (II/2)(V)	320
Rated voltage (III/2) (V)	320
Rated voltage (III/3)(V)	200
Rated impulse voltage (II/2)(KV)	4
Rated impulse voltage (III/2)(KV)	4
Rated impulse voltage (III/3)(KV)	4
Conductor cross section solid. min (mm^2)	0.2
Conductor cross section solid.max (mm^2)	1.5
Conductor cross section stranded. min (mm^2)	0.2
Conductor cross section stranded. max (mm^2)	1.5
2 conductors with same cross section, solid, max (mm^2)	1
2 conductors with same cross section, stranded, max (mm^2)	1
Screw thread	M3
Slotted screwdriver size (Blade thickness x Width)(mm)	0.8x4.0
Philips screwdriver size	PH2
Rated torque (N.m)	0.8
Recommend tightening torque. min (N.m)	0.5
Recommend tightening torque. max (N.m)	0.8
Stripping Length (mm)	7~8

Connection data-UL

Rated voltage (UL/CUL Group B)(V)	300
Rated current (UL/CUL Group B)(A)	15
Min. solid wire connection (AWG) acc. to UL/CUL	22
Max. solid wire connection AWG acc. to UL/CUL	14
Min. stranded wire connection AWG acc. to UL/CUL	22
Max. stranded wire connection AWG acc. to UL/CUL	14

Environment & Safety

Back of the hand protection (YES or NO)	YES
Operating temperature. max (°C)	130
Operating temperature. min (°C)	-40

© DINKLE ENTERPRISE CO ,LTD. ALL RIGHT RESERVED

UL Recognized

Wire Range (Group B)(AWG)	22~14
Rated voltage (Group B)(V)	300
Rated current (Group B)(A)	15

VDE Approval

Wire Range (mm²)	0.2~1.5
Rated current (A)	17.5

Drawings

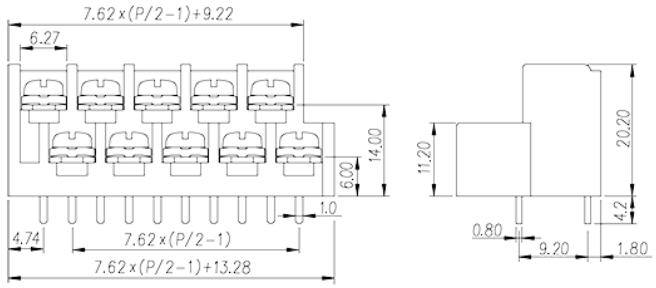

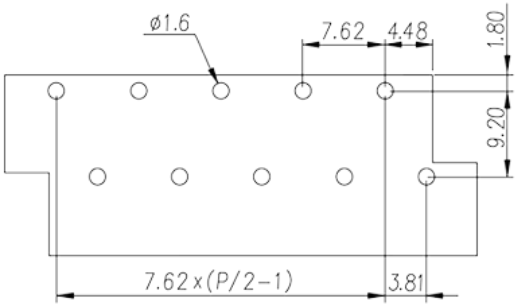

Approvals

© DINKLE ENTERPRISE CO ,LTD. ALL RIGHT RESERVED